CITY OF FEDERAL WAY

JOINT OPERATIONS & MAINTENANCE FACILITY

VOL. II BUILDING B - FLEET & MAINTENANCE

SHEET INDEX

ARCHITECTURAL DRAWINGS

AB002	VOLUMN II SUBCOVER SHEET
AB010	PICTORIAL VIEWS
AB020	CODE INFORMATION
AB030	BUILDING ASSEMBLY LEGEND
AB035	BUILDING THERMAL ENVELOPE LEGEND
AB040	COLORS AND MATERIALS SCHEDULE
AB100	COMPOSITE FLOOR PLAN
AB101	COMPOSITE FLOOR PLAN - UPPER WALLS
AB102	PARTIAL FLOOR PLAN
AB103	PARTIAL FLOOR PLAN
AB110	ROOF PLAN
AB111	ROOF PLAN
AB120	REFLECTED CEILING PLAN
AB121	REFLECTED CEILING PLAN
AB140	ENLARGED FLOOR PLANS
AB200	SCHEDULES
AB300	EXTERIOR ELEVATIONS
AB301	EXTERIOR ELEVATIONS
AB302	EXTERIOR ELEVATIONS
AB303	EXTERIOR ELEVATIONS
AB400	BUILDING SECTIONS
AB401	BUILDING SECTIONS
AB500	WALL SECTIONS
AB501	WALL SECTIONS
AB600	STANDARD CASEWORK AND FIXTURES
AB601	INTERIOR ELEVATIONS
AB700	EXTERIOR DETAILS
AB701	EXTERIOR DETAILS
AB702	EXTERIOR DETAILS
AB703	EXTERIOR DETAILS
AB720	INTERIOR DETAILS

STRUCTURAL DRAWINGS

SB001	STRUCTURAL NOTES
SB002	STRUCTURAL NOTES
SB010	QUALITY ASSURANCE PLAN
SB011	QUALITY ASSURANCE PLAN
SB020	TYPICAL DETAILS
SB021	STEEL STUD DETAILS
SB022	STEEL STUD DETAILS
SB030	FRAMING NOTES AND SCHEDULES
SB101	FOUNDATION PLAN - SOUTH
SB102	FOUNDATION PLAN - NORTH
SB201	ROOF FRAMING PLAN - SOUTH
SB202	ROOF FRAMING PLAN - NORTH
SB203	ROOF DIAPHRAGM ATTACHMENT PLAN
SB301	FOUNDATION DETAILS
SB302	FOUNDATION DETAILS
SB401	ROOF FRAMING DETAILS
SB402	ROOF FRAMING DETAILS
SB403	ROOF FRAMING DETAILS
SB404	ROOF FRAMING DETAILS
SB501	BRACED FRAME ELEVATIONS
SB502	BRACED FRAME ELEVATIONS
SB503	BRACED FRAME ELEVATIONS
SB511	BRACED FRAME DETAILS
SB512	BRACED FRAME DETAILS
SB513	BRACED FRAME DETAILS
SB601	CANOPY PLANS
SB611	CANOPY DETAILS
SB701	EQUIPMENT SUPPORT PLANS
SB711	EQUIPMENT PLANS AND DETAILS

MECHANICAL DRAWINGS

MB001	MECHANICAL LEGEND AND DRAWING INDEX
MB002	MECHANICAL ABBREVIATIONS AND GENERAL NOTES
MB003	MECHANICAL SCHEDULES
MB004	MECHANICAL SCHEDULES
MB005	MECHANICAL SCHEDULES
MB006	HVAC VENTILATION, LOAD CALCULATIONS, AND WSEC SCHEDULES
MB007	WSEC FAN POWER ALLOWANCE CALCULATIONS
MB201	MAIN FLOOR HVAC ZONE PLAN
MB301	MAIN FLOOR HVAC PLAN - SOUTH
MB302	MAIN FLOOR HVAC PLAN - NORTH
MB501	MECHANICAL ROOF PLAN - SOUTH
MB502	MECHANICAL ROOF PLAN - NORTH
MB601	MECHANICAL SECTIONS
MB602	MECHANICAL SECTIONS
MB801	MECHANICAL DETAILS
MB802	MECHANICAL DETAILS
MB901	MECHANICAL CONTROL DIAGRAMS AND SEQUENCE OF OPERATIONS
MB902	MECHANICAL CONTROL DIAGRAMS AND SEQUENCE OF OPERATIONS
MB903	MECHANICAL CONTROL DIAGRAMS AND SEQUENCE OF OPERATIONS
PB001	PLUMBING LEGEND AND DRAWING INDEX
PB002	PLUMBING GENERAL NOTES, AND ABBREVIATIONS
PB003	PLUMBING SCHEDULES
PB101	PLUMBING FOUNDATION PLAN - SOUTH
PB102	PLUMBING FOUNDATION PLAN - NORTH
PB201	MAIN FLOOR PLUMBING PLAN - SOUTH
PB202	MAIN FLOOR PLUMBING PLAN - NORTH
PB501	PLUMBING ROOF PLAN - SOUTH
PB502	PLUMBING ROOF PLAN - NORTH
PB601	PLUMBING ENLARGED PLAN AND SECTION - SOUTH
PB602	PLUMBING ENLARGED PLAN AND SECTION - NORTH
PB603	PLUMBING ENLARGED PLAN AND SECTIONS
PB701	PLUMBING RISER DIAGRAMS - DOMESTIC
PB702	PLUMBING RISER DIAGRAMS - SANITARY
PB801	PLUMBING DETAILS
PB802	PLUMBING DETAILS
PB803	PLUMBING ACCESS PANEL LOCATIONS - SOUTH
PB804	PLUMBING ACCESS PANEL LOCATIONS - NORTH

ELECTRICAL DRAWINGS

EB001	ELECTRICAL LEGEND AND DRAWING INDEX
EB002	ELECTRICAL ABBREVIATIONS
EB003	ELECTRICAL SCHEDULES
EB004	ELECTRICAL SCHEDULES
EB101	MAIN FLOOR LIGHTING CONTROL ZONE PLAN - SOUTH
EB102	MAIN FLOOR LIGHTING CONTROL ZONE PLAN - NORTH
EB201	MAIN FLOOR LIGHTING PLAN - SOUTH
EB202	MAIN FLOOR LIGHTING PLAN - NORTH
EB301	MAIN FLOOR POWER PLAN - SOUTH
EB302	MAIN FLOOR POWER PLAN - NORTH
EB401	MAIN FLOOR MECHANICAL POWER PLAN - SOUTH
EB402	MAIN FLOOR MECHANICAL POWER PLAN - NORTH
EB501	ELECTRICAL ROOF PLAN - SOUTH
EB502	ELECTRICAL ROOF PLAN - NORTH
EB601	ELECTRICAL ENLARGED PLAN
EB701	MAIN FLOOR FIRE ALARM PLAN-SOUTH
EB702	MAIN FLOOR FIRE ALARM PLAN - NORTH
EB801	ELECTRICAL DETAILS
EB802	ELECTRICAL DETAILS
EB901	ELECTRICAL ONE-LINE DIAGRAM
EB902	PANEL SCHEDULES
EB903	PANEL SCHEDULES

FIRE PROTECTION DRAWINGS

FB001	FIRE PROTECTION LEGEND, GENERAL NOTES, SCHEDULES AND DRAWING INDEX
FB101	MAIN FLOOR FIRE PROTECTION PLAN - SOUTH
FB102	MAIN FLOOR FIRE PROTECTION PLAN - NORTH
FB201	MAIN FLOOR HAZARD LEVEL ZONING PLAN - SOUTH
FB202	MAIN FLOOR HAZARD LEVEL ZONING PLAN - NORTH
FB801	FIRE PROTECTION DETAILS AND DIAGRAMS

TELE COMMUNICATION DRAWINGS

TB001	TELECOM LEGEND, GENERAL NOTES, ABBREVIATIONS & DRAWING INDEX
TB002	TELECOM AND SECURITY ROUGH-IN SCHEDULE
TB601	MAIN FLOOR TELECOM PLAN - SOUTH
TB602	MAIN FLOOR TELECOM PLAN - NORTH
TB801	TELECOM DETAILS
TB802	TELECOM DETAILS
TB803	TELECOM DETAILS
TB804	TELECOM DETAILS
TB805	TELECOM DETAILS
TB806	SECURITY DETAILS
TB807	SECURITY DETAILS
TB901	SECURITY ONE-LINE DIAGRAM

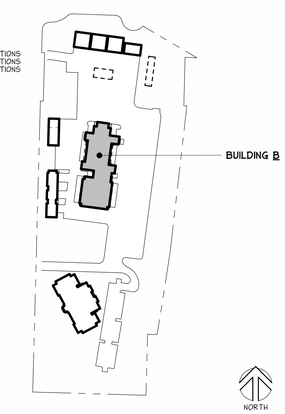

KEYPLAN

Helix design group

AMERICAN INSTITUTE OF ARCHITECTS

8934 REGISTERED ARCHITECT FLOYD L. CATE STATE OF WASHINGTON

HELIX DESIGN GROUP, INC

VOLUMN II SUBCOVER SHEET

CITY OF FEDERAL WAY FLEET & SHOP BUILDING

FEDERAL WAY, WASHINGTON

REVISION	DATE

DATE	JOB NO.
05.06.24	a23-087

BID SET

DRAWING NO.

AB002

© HELIX DESIGN GROUP, INC.: All rights reserved. No part of this document may be reproduced in any form or by any means without permission in writing from Helix Design Group.

UNOFFICIAL COPY Official bid documents, plan holder's list, and addenda (if applicable) are available on BXWA.com

PLOTTED: 5/10/2024 3:24:54 PM PROJECT: a23-087 - CITY OF FEDERAL WAY
FILE PATH: C:\Shwa\Revit_Local\2022\a23-087 Fed Way OPF - Bldg B_CENTRAL_r22_EBoektstroman.rvt

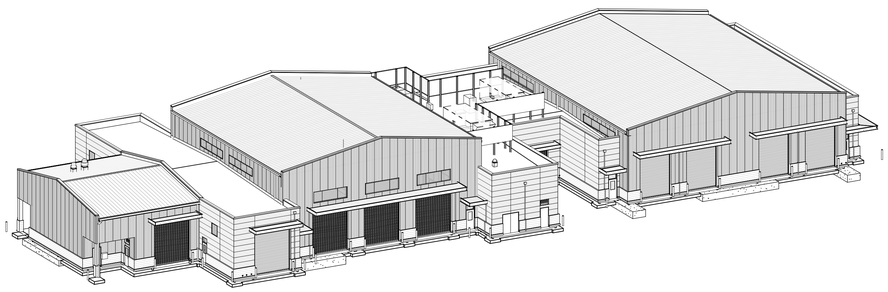

5A ISOMETRIC VIEW - VIEW FROM SOUTHWEST

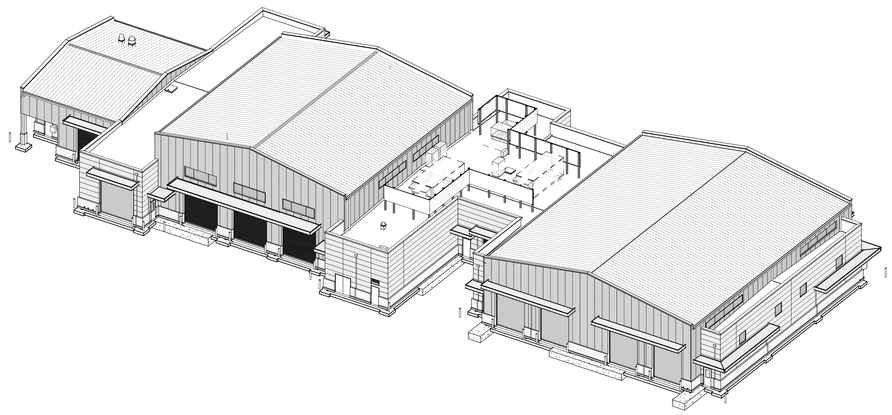

5F ISOMETRIC VIEW - VIEW FROM NORTHWEST

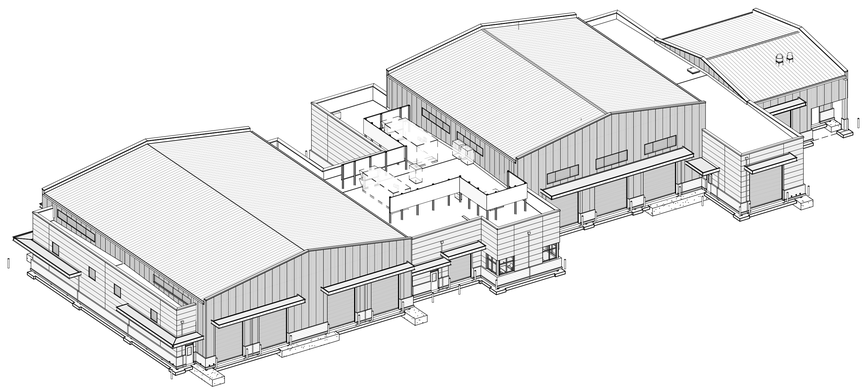

10A ISOMETRIC VIEW - VIEW FROM SOUTHEAST

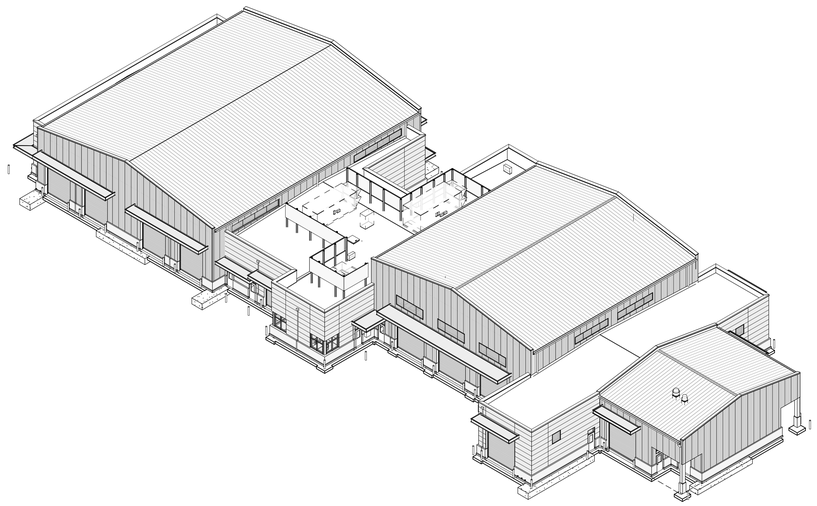

10F ISOMETRIC VIEW - VIEW FROM NORTHEAST

UNOFFICIAL COPY Official bid documents, plan holder's list, and addenda (if applicable) are available on BXWA.com

PLOTTED: 5/07/2024 3:30:03 PM PROJECT: a23-087 - CITY OF FEDERAL WAY
FILE PATH: C:\Shared\Local\2022\a23-087 Fed Way OPF - Bldg B-CENTRAL_r22.1Ebakstrom.rvt

Helix design group

AMERICAN INSTITUTE OF ARCHITECTS

6934 REGISTERED ARCHITECT FLOWEL CATE STATE OF WASHINGTON

HELIX DESIGN GROUP, INC

PICTORIAL VIEWS

CITY OF FEDERAL WAY FLEET & SHOP BUILDING

FEDERAL WAY, WASHINGTON

REVISION	DATE

DATE	JOB NO.
05.06.24	a23-087

BID SET

AB010

DRAWING NO.

© HELIX DESIGN GROUP, INC.: All rights reserved. No part of this document may be reproduced in any form or by any means without permission in writing from Helix Design Group.

CODE INFORMATION BUILDING 'B' - FLEET MAINTENANCE & DEPARTMENTAL SHOP'S BUILDING

CODE PLAN LEGEND

DESCRIPTION	SYMBOL AND TEXT
ROOM IDENTIFICATION — room name, room number	ROOM NAME 100
ROOM OCCUPANT LOAD — room occupant count	00
EXIT LOAD — exit occupant count	00
OCCUPANCY GROUP — A assembly, B business, I institutional, S storage, M mercantile, H hazard, U utility	B
ROOM OCCUPANCY TAG — occupancy group, room area, occupant load, occupant load factor, room number	ROOM NAME; A-3; 150 SF; 101A; B; 25
1-HR RATED FIRE SEPARATION — 1-hour fire rated assembly	1-HR
FIRE EXTINGUISHERS — fire extinguisher in surface-mounted cabinet	F.E.

GOVERNING CODE

AS ADOPTED AND AMENDED BY WASHINGTON STATE BUILDING CODE COUNCIL.

2018 INTERNATIONAL BUILDING CODE (IBC)	WAC 51-50
2018 INTERNATIONAL FIRE CODE (IFC)	WAC 51 -54
2018 INTERNATIONAL MECHANICAL CODE (IMC)	WAC 51-52
2018 UNIFORM PLUMBING CODE (UPC)	WAC 51-56 & WAC 51-57
2018 WASHINGTON STATE ENERGY CODE (WSEC)	WAC 51-11
2020 NATIONAL ELECTRIC CODE	WAC 296-46
2017 ACCESSIBLE AND USABLE BUILDING AND FACILITIES ICC / ANSI A117.1	
OCCUPATIONAL SAFETY AND HEALTH ADMINISTRATION LAW AND REGULATIONS (OSHA)	

GENERAL BUILDING CRITERIA:

FIRE PROTECTION: FIRE ALARM SYSTEM IN BUILDINGS OVER 3000 SQ. FT AND SPRINKLES IN BUILDINGS OVER 5000 SQ. FT.

WIND/SEISMIC: BASIC WIND SPEED 85 MPH, EXPOSURE, 25# SNOW LOAD, SEISMIC ZONE D-1.

OCCUPANCY GROUP:	S-1 STORAGE (MOTOR VEHICLE REPAIR GARAGE) S-2 STORAGE (LOW-HAZARD STORAGE)	IBC SECTION 311 IBC SECTION 311
OCCUPANT LOAD FACTOR: INDUSTRIAL AREAS PARKING GARAGES STORAGE WAREHOUSES	 100 GROSS (AUTOMOTIVE REPAIR) 200 GROSS 300 GROSS 500 GROSS	IBC TABLE 1004.5
OCCUPANT LOAD:	11,700 SF / 100 = 137 OCCUPANTS, INDUSTRIAL, FLEET MAINTENANCE & SHOPS 1,312 SF/ 300 = 38 OCCUPANTS STORAGE. 175 OCCUPANTS	
CONSTRUCTION TYPE:	II-B	IBC SECTION 602
ALLOWABLE BUILDING AREA	70,000 (S1) S-1 OCCUPANCY 104,000 (S1) S-2 OCCUPANCY S1 = FIRE SPRINKLER SYSTEM / SINGLE STORY	IBC TABLE 506.2
PROPOSED: (FLEET & DEPARTS)	FLEET SHOP (S-1) 11,700 WASH BAY AND EQUIPMENT (S-1) 1,960 DEPARTMENTAL SHOPS (S-2) 11,312 24,972 SF. < 70,000	
ALLOWABLE BUILDING HEIGHT	75 FT	IBC TABLE 504.3
PROPOSED:	37 FT. AVG. HEIGHT PER FHMC	
ALLOWABLE NUMBER OF STORIES	4 STORIES	IBC TABLE 504.4
PROPOSED:	SINGLE STORY STRUCTURE	

FIRE RESISTIVE RATING REQUIREMENTS		IBC TABLE 601
STRUCTURAL FRAME	0 HR.	
BEARING WALLS EXTERIOR	0 HR.	
INTERIOR	0 HR.	
NON-BEARING WALLS EXTERIOR		IBC TABLE 602
INTERIOR	0 HR.	
FLOOR CONSTRUCTION	0 HR.	
ROOF CONSTRUCTION	0 HR.	
RISK CATEGORY:	II	IBC TABLE 1604.5
FIRE SPRINKLER SYSTEM	EQUIPPED WITH FIRE SPRINKLER SYSTEM	IBC SECTION 903
FIRE ALARM SYSTEM	EQUIPPED WITH FIRE ALARM SYSTEM	IBC SECTION 907
SEISMIC CATEGORY:	BUILDINGS STRUCTURE TO BE DESIGNED TO MEET ESSENTIAL FACILITY STANDARD *PER OWNER REQUEST*. STRUCTURAL UPGRADE ONLY, THIS IS NOT AN ESSENTIAL FACILITY PER CODE BASED ON ITS PROPOSED USE.	
PLUMBING FIXTURE COUNT:		IBC TABLE 2902

CLASSIFICATION: FACTORY AND INDUSTRIAL USE CLASSIFICATION:

S-1 & S-2 (WORK SHOPS AND STORAGE)

	MEN WC	LAV.	WOMEN WC	LAV.	DF
OCCUPANTS 175 / 2= 88 EA. SEX	1 (1:100)	1 (1:100)	1 (1:100)	1 (1:200)	1 (1:400)
TOTAL:	1	1	1	1	1
PROPOSED COUNT:	2	2	2	2	1

OTHER: (2) SERVICE SINKS
(1) THREE-PERSON HAND WASH SINK IN FLEET.

CODE ANALYSIS

NOTE

1. OCCUPANT LOAD: (IBC TABLE 1004.5)

FLOOR LEVEL	OCCUPANTS
FIRST FLOOR	166

2. MEANS OF EGRESS SIZING: (IBC SECTION 1005) BASED ON MAX. LOAD PER SPACE

FLOOR LEVEL	PROVIDED	REQUIRED
FIRST FLOOR	36 IN MIN.	13 IN

3. NUMBER OF EXITS: (IBC SECTION 1006)

FLOOR LEVEL	PROVIDED	REQUIRED
FIRST FLOOR	15 EXITS	2 EXITS

4. MAX TRAVEL DISTANCE WITH SINGLE EXIT DOOR: (IBC TABLE 1006.2.1)

FLOOR LEVEL	PROVIDED	MAX. ALLOWABLE
FIRST FLOOR	30'	100'

5. EXIT ACCESS TRAVEL DISTANCE: (IBC SECTION 1017)

USE	ACTUAL	MAX. ALLOWABLE
S-1	64 FT	250 FT
S-2	60 FT	400 FT

GENERAL NOTES

NOTE

1. REFER TO SHEETS AB030 & AB035 FOR ADDITIONAL CODE INFORMATION.
2. STORAGE RACKS IN BUILDING SHALL NOT EXCEED 12' IN HEIGHT. NOT CONSIDERED HIGH PILED COMBUSTIBLE STORAGE.

CODE PLAN NOTES

SYMBOL	NOTE
GC01	ALL DOORS SHOWN ARE A MINIMUM WIDTH OF 36" UNLESS NOTED OTHERWISE.

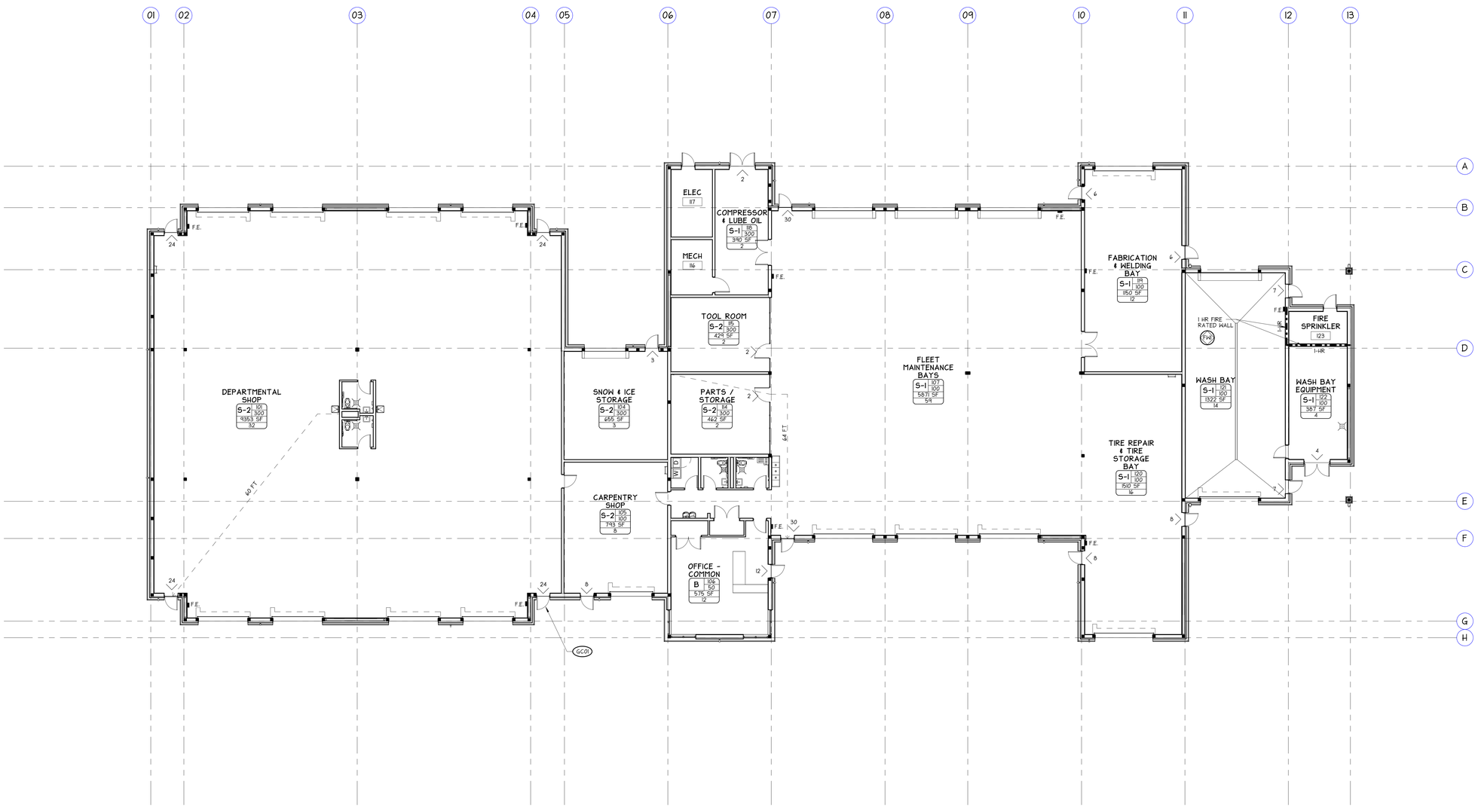

10C CODE PLAN
3/32" = 1'-0"

NORTH

0' 3' 6' 12' 20'
SCALE: 3/32" = 1'-0"

Helix design group

AMERICAN INSTITUTE OF ARCHITECTS

8934 REGISTERED ARCHITECT FLOWELL GATE STATE OF WASHINGTON

HELIX DESIGN GROUP, INC

CODE INFORMATION

CITY OF FEDERAL WAY FLEET & SHOP BUILDING

FEDERAL WAY, WASHINGTON

REVISION	DATE

DATE	JOB NO.
05.06.24	a23-087

BID SET

AB020

DRAWING NO.

© HELIX DESIGN GROUP, INC.: All rights reserved. No part of this document may be reproduced in any form or by any means without permission in writing from Helix Design Group.

PLOTTED: 5/10/2024 3:30:04 PM PROJECT: a23-087 - CITY OF FEDERAL WAY
FILE PATH: C:\Sheet\Kent_Local_2022\a23-087 Fed Way OPF - Bldg B_CENTRAL_r22.EBaker.rvt

UNOFFICIAL COPY Official bid documents, plan holders list and addenda (if applicable) are available on BIDWA.com

BUILDING ASSEMBLY LEGEND

WALLS

W6 — CAST-IN-PLACE CONCRETE (DAMPPROOFING SYSTEM)

ASSEMBLY

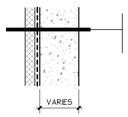

MATERIALS

BELOW GRADE MATERIAL
RIGID INSULATION (C.I.) *
WATERPROOFING SYSTEM (9) **
CAST-IN-PLACE CONCRETE (BELOW GRADE) (1)
FINISH PER SCHEDULE

* XPS RIGID INSULATION AT LOCATIONS REQUIRED BY WSEC. REFER TO BUILDING THERMAL ENVELOPE LEGEND. EXTERIOR SIDE OF FOUNDATION WALL.

** WATERPROOFING SYSTEM AT EXTERIOR SIDE OF BELOW GRADE WALLS AND FOOTINGS.

W12 — CONCRETE MASONRY UNIT (VENEER) (METAL STUD FRAMING)

ASSEMBLY

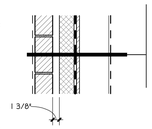

MATERIALS

FINISH PER SCHEDULE
CONCRETE MASONRY UNIT (VENEER)
AIR SPACE (DRAINAGE CAVITY)
STAINLESS STEEL MASONRY VENEER TIES * [13]
INSULATED METAL PANEL (MP-3) *
WEATHER RESISTIVE BARRIER (FLUID APPLIED) [12]
EXTERIOR GYPSUM SHEATHING
METAL STUDS (MINIMUM 18 GAUGE) [2]
MATERIAL AND FINISH PER SCHEDULE

* FASTENED INTO METAL STUD FRAMING.

W43 — INSULATED METAL PANEL (IMP-1) HORIZONTAL PANELS (METAL STUD FRAMING)

ASSEMBLY

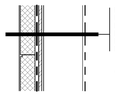

MATERIALS

FINISH PER SCHEDULE
INSULATED METAL PANEL (MP-1) *
WEATHER RESISTIVE BARRIER (FLUID APPLIED) [12]
EXTERIOR GYPSUM SHEATHING
METAL STUDS (MINIMUM 18 GAUGE) [2]
MATERIAL AND FINISH PER SCHEDULE

* HORIZONTAL PANELS REFER TO COLORS AND MATERIALS SCHEDULE.

W44 — INSULATED METAL PANEL (IMP-2) VERTICAL PANELS (METAL STUD FRAMING)

ASSEMBLY

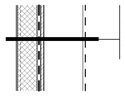

MATERIALS

FINISH PER SCHEDULE
INSULATED METAL PANEL (MP-2) *
WEATHER RESISTIVE BARRIER (FLUID APPLIED) [12]
EXTERIOR GYPSUM SHEATHING [14]
8" METAL STUDS (MINIMUM 18 GAUGE) [2]
MATERIAL AND FINISH PER SCHEDULE

* VERTICAL PANELS REFER TO COLORS AND MATERIALS SCHEDULE.

W45 — INSULATED METAL PANEL (IMP-1) HORIZONTAL PANELS (METAL STUD FRAMING) (PARAPET WALL)

ASSEMBLY

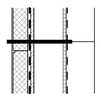

MATERIALS

FINISH PER SCHEDULE
INSULATED METAL PANEL (MP-1) *
WEATHER RESISTIVE BARRIER (FLUID APPLIED) [12]
EXTERIOR GYPSUM SHEATHING [14]
METAL STUDS (MINIMUM 18 GAUGE) [2]
5/8" COVER BOARD [11]
EXTENDED SINGLE-PLY MEMBRANE ROOFING (SPMR) SYSTEM **

* HORIZONTAL INSTALLATION OF INSULATED METAL PANELS REFER TO COLORS AND MATERIALS SCHEDULE.

** (SPMR-1): MANUFACTURER AND INSTALLER TO PROVIDE ALL COMPONENTS REQUIRED TO MEET THE ROOFING MANUFACTURER'S 20 YEAR GOLDEN SEAL TOTAL SYSTEMS WARRANTY.

FLOORS

F1 — CONCRETE SLAB-ON-GRADE (VAPOR BARRIER)

ASSEMBLY

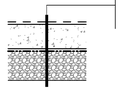

MATERIALS

MATERIAL AND FINISH PER SCHEDULE *
CAST-IN-PLACE CONCRETE SLAB-ON-GRADE **
VAPOR BARRIER [10]
CAPILLARY BREAK LAYER (6 INCH MINIMUM) [6] ***

* RECESS SLAB FOR FLOOR FINISHES AS REQUIRED

** REFER TO STRUCTURAL DRAWINGS FOR REINFORCING STEEL AND SLAB THICKNESS.

*** REFER TO GEOTECHNICAL REPORT.

F2 — PLYWOOD DECKING (METAL STUD FLOOR FRAMING)

ASSEMBLY

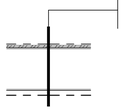

MATERIALS

FINISH PER SCHEDULE
PLYWOOD DECK *
METAL STUD FRAMING MEMBERS ** [8]
CEILING PER CEILING PLAN

* REFER TO STRUCTURAL DRAWINGS FOR THICKNESS.

** REFER TO STRUCTURAL DRAWINGS FOR SIZE AND SPACING.

ROOFS

R1 — SINGLE-PLY MEMBRANE ROOFING (SPMR) (OPEN WEB STEEL JOISTS FRAMING)

ASSEMBLY

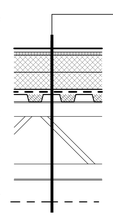

MATERIALS

FINISH PER SCHEDULE
SINGLE-PLY MEMBRANE ROOFING (SPMR) SYSTEM *
1/2" COVER BOARD [11] *
RIGID INSULATION (C.I.) [5] *
AIR BARRIER * [10]
1-1/2" METAL DECK (TYPE B) [3] [4]
STRUCTURAL ROOF FRAMING **
MATERIAL AND FINISH PER SCHEDULE ***

* (SPMR-1): MANUFACTURER AND INSTALLER TO PROVIDE ALL COMPONENTS REQUIRED TO MEET THE ROOFING MANUFACTURER'S 20 YEAR GOLDEN SEAL TOTAL SYSTEMS WARRANTY.

** REFER TO STRUCTURAL DRAWINGS FOR SIZE AND SPACING.

*** EXPOSED STRUCTURE AND METAL DECK WHERE INDICATED ON ROOM FINISH SCHEDULE.

R2 — STANDING SEAM METAL ROOFING (SSMR) (OPEN WEB STEEL JOISTS FRAMING)

ASSEMBLY

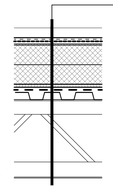

MATERIALS

FINISH PER SCHEDULE
STANDING SEAM METAL ROOFING (SSMR)
MEMBRANE UNDERLAYMENT (HIGH-TEMP)
1/2" COVER BOARD
RIGID INSULATION (C.I.) [15]
1/2" ROOF BOARD
AIR BARRIER [10]
1-1/2" METAL DECK (TYPE B) [4]
STRUCTURAL ROOF FRAMING **
MATERIAL AND FINISH PER SCHEDULE

* INSTALL (2) LAYERS.

** REFER TO STRUCTURAL DRAWINGS FOR SIZE AND SPACING.

R3 — METAL DECK (MF-2) (STRUCTURAL STEEL FRAMING)

ASSEMBLY

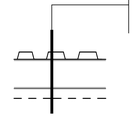

MATERIALS

FINISH PER SCHEDULE
METAL DECK [4]
STRUCTURAL STEEL FRAMING [7] *
AIR SPACE
SOFFIT ASSEMBLY

* REFER TO STRUCTURAL DRAWINGS FOR SIZE AND SPACING.

FIRE RATED WALLS

FW6 — 1-HR RATED FIRE WALL (METAL STUD FRAMING)

ASSEMBLY

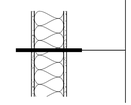

MATERIALS

FINISH PER SCHEDULE
5/8" TYPE X GYPSUM WALL BOARD *
METAL STUDS @ 16" O.C. (MINIMUM 18 GAUGE) [2]
MINERAL WOOL BATT INSULATION (STUD CAVITY)
5/8" TYPE X GYPSUM WALL BOARD *
MATERIAL AND FINISH PER SCHEDULE

* 5/8" EXTERIOR GYPSUM SHEATHING AT EXTERIOR SIDE OF EXTERIOR WALLS.

FIRE RATED ASSEMBLY: UL U419

SOFFITS

S1 — EXTERIOR GYPSUM SOFFIT BOARD (ESB) (METAL SOFFIT FRAMING)

ASSEMBLY

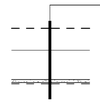

MATERIALS

ROOF ASSEMBLY
AIR SPACE
METAL SOFFIT FRAMING @ 16" O.C. (MINIMUM 18 GAUGE) [8]
EXTERIOR GYPSUM SOFFIT BOARD (ESB)
FINISH PER SCHEDULE

BUILDING ASSEMBLY NOTES

GENERAL NOTES:

1. WALL TYPES: REFER TO FLOOR PLAN FOR WALL TYPE LEGEND.
2. REFER TO EXTERIOR ELEVATIONS FOR EXTEND OF EXTERIOR WALL ASSEMBLY.
3. REFER TO ROOF PLAN FOR ROOF ASSEMBLY LOCATIONS.
4. INTERIOR MATERIALS AND FINISHES: REFER TO ROOM FINISH SCHEDULE.
5. EXTERIOR FINISHES: REFER TO EXTERIOR FINISH SCHEDULE EXTERIOR ELEVATION SHEETS.
6. REFER TO CODE INFORMATION ON SHEET AB020 FOR FIRE RESISTANT RATING REQUIREMENTS OF BUILDING ASSEMBLIES.
7. REFER TO BUILDING THERMAL ENVELOPE LEGEND ON SHEET AB035 FOR MINIMUM INSULATION R-VALUES AND INSTALLATION REQUIREMENTS.
8. ALL EXPOSED CONCRETE SHALL BE CONSIDERED "ARCHITECTURAL CONCRETE".
9. SEPARATE DIRECT CONTACT OF DISSIMILAR METALS; INSTALL MEMBRANE FLASHING BETWEEN DISSIMILAR METAL SURFACES.
10. REFER TO DETAIL 6G/AB720 FOR TOP OF WALL AT FIRE RATED WALL ASSEMBLY.

FOOTNOTES

[1] REFER TO STRUCTURAL DRAWINGS FOR REINFORCING STEEL.

[2] REFER TO STRUCTURAL DRAWINGS FOR SIZE, GAUGE AND SPACING OF METAL STUD FRAMING. GALVANIZED G90 COLD-FORMED METAL FRAMING.

[3] NOT USED.

[4] GALVANIZED STEEL DECKING. REFER TO STRUCTURAL DRAWINGS FOR TYPE.

[5] POLYISOCYANURATE (ISO) RIGID INSULATION BOARD; LOW SLOPE ROOF APPLICATION. (2) LAYERS OF 3.5" THICK RIGID INSULATION BOARD, STAGGERED LAYERS. 7" TOTAL THICKNESS. MECHANICALLY ATTACHED TO METAL DECK.

[6] INSTALL ALL HORIZONTALLY ROUTED PIPES AND CONDUITS BELOW CAPILLARY BREAK LAYER.

[7] PROTECTIVE COATING: HOT-DIPPED GALVANIZED COATING.

[8] REFER TO STRUCTURAL DRAWINGS FOR SIZE, GAUGE AND SPACING OF METAL CEILING JOISTS AND METAL SOFFIT JOISTS. MAXIMUM SPACING 16" O.C. INSTALL METAL BACKING FOR CEILING AND SOFFIT MOUNTED ITEMS. GALVANIZED G90 COLD-FORMED METAL FRAMING.

[9] WATERPROOFING SYSTEM: FLUID-APPLIED MEMBRANE WATERPROOFING SYSTEM. GRACE CONSTRUCTION PRODUCTS (GCP APPLIED TECHNOLOGIES).

[10] VAPOR BARRIER: STEGO WRAP 15-MIL VAPOR BARRIER. THICKNESS: 15 MILS MINIMUM. MANUFACTURER: STEGO INDUSTRIES LLC. PROVIDE ALL MANUFACTURERS ACCESSORIES FOR COMPLETE INSTALLATION INCLUDING; TAPES AND MASTIC. ALL PENETRATIONS TO BE SEALED; OVERLAP ALL SEAMS A MINIMUM OF 6-INCHES AND TAPE SEAL.

[11] COVERBOARD: GEORGIA-PACIFIC. DENSDECK PRIME ROOF BOARD.

[12] WEATHER RESISTIVE BARRIER. REFER TO SPECIFICATION SECTION 072500.

[13] STAINLESS STEEL FLEXIBLE MASONRY TIES.

[14] EXTERIOR GYPSUM SHEATHING. 5/8 INCH DENSGLASS FIREGUARD TYPE-X SHEATHING. GEORGIA-PACIFIC GYPSUM.

[15] EXTRUDED POLYSTYRENE (XPS) RIGID INSULATION BOARD: STANDING SEAM METAL ROOFING (SSMR) APPLICATION. (2) LAYERS OF 4" THICK RIGID INSULATION BOARD. STAGGERED LAYERS. 8" TOTAL THICKNESS.

STRUCTURAL STEEL FABRICATION NOTES

1. REFER TO BUILDING ASSEMBLY LEGEND GENERAL NOTES.
2. REFER STRUCTURAL GENERAL NOTES.
3. STRUCTURAL STEEL AND MISCELLANEOUS METAL FABRICATIONS FINISH:

   EXPOSED EXTERIOR STRUCTURAL STEEL TO BE HOT-DIP GALVANIZED PROTECTIVE COATED. (FIELD PAINT)

4. NO FIELD WELDING AND NO FIELD CUTTING OF HOT-DIP GALVANIZED COATED STRUCTURAL STEEL. ONLY FIELD BOLTED CONNECTIONS PERMITTED.

Helix design group

AMERICAN INSTITUTE OF ARCHITECTS

6934 REGISTERED ARCHITECT FLOWELL GATE STATE OF WASHINGTON

HELIX DESIGN GROUP, INC

BUILDING ASSEMBLY LEGEND

CITY OF FEDERAL WAY FLEET & SHOP BUILDING

FEDERAL WAY, WASHINGTON

REVISION	DATE

DATE	JOB NO.
05.06.24	a23-087

BID SET

AB030

DRAWING NO.

© HELIX DESIGN GROUP, INC.: All rights reserved. No part of this document may be reproduced in any form or by any means without permission in writing from Helix Design Group.

UNOFFICIAL COPY Official 8.5" x 11" copies of the plans, plan holders list, and addenda (if applicable) are available on BXWA.com

PLOTTED: 5/10/2024 3:30:04 PM PROJECT: a23-087 - CITY OF FEDERAL WAY
FILE PATH: G:\Shared\Revit_Local\2022\a23-087 | Fed Way CPF - Bldg B_CENTRAL_22.EBasbirsamvrt

BUILDING THERMAL ENVELOPE LEGEND

2018 WSEC COMMERCIAL BUILDING ENERGY EFFICIENCY REQUIREMENTS:

BUILDING SHALL COMPLY WITH THE WSEC ENERGY CODE BASED ON THE PRESCRIPTIVE METHOD AND SHALL COMPLY WITH THE FOLLOWING SECTIONS:

SECTION C402	BUILDING ENVELOPE	APPLICABLE
SECTION C403	MECHANICAL SYSTEMS	APPLICABLE
SECTION C404	SERVICE WATER HEATING AND PRESSURE-BOOSTER SYSTEMS	APPLICABLE
SECTION C405	ELECTRICAL POWER AND LIGHTING SYSTEMS	APPLICABLE
SECTION C406	EFFICIENCY PACKAGES	APPLICABLE
SECTION C407	TOTAL BUILDING PERFORMANCE	NOT APPLICABLE
SECTION C408	SYSTEM COMMISSIONING	NOT APPLICABLE
SECTION C409	ENERGY METERING AND ENERGY CONSUMPTION MANAGEMENT	NOT APPLICABLE
SECTION C410	REFRIGERATION SYSTEM REQUIREMENTS	NOT APPLICABLE

SECTION C301 CLIMATE ZONE:

CLIMATE ZONE: 4C KING COUNTY

SECTION C402 BUILDING ENVELOPE REQUIREMENTS:

TABLE C402.1.3 OPAQUE THERMAL ENVELOPE INSULATION COMPONENT:

	WSEC MINIMUM REQUIRED:	PROVIDED:
WALL ASSEMBLY:		
ABOVE GRADE:		
STEEL FRAMED:	R-13 + R-10 (C.I.)	R-19 (C.I)
BELOW GRADE:		
MASS:	R-9.5 (C.I.)	R-10 [4]
ROOF ASSEMBLY:		
ABOVE DECK:	R-38 (C.I.)	30 [3]
SLAB-ON-GRADE FLOORS:		
UNHEATED SLABS:	R-10 (C.I.) - PERIMETER (24" VERTICAL)	R-10 [4]
OPAQUE DOORS:		
SWINGING:	U=0.37 ASSEMBLY MAXIMUM.	
NON-SWINGING:	R-4.75 ASSEMBLY MINIMUM.	

TABLE C402.4 BUILDING ENVELOPE FENESTRATION MAXIMUM U-FACTOR AND SHGC REQUIREMENTS:

VERTICAL FENESTRATION:	MAXIMUM ALLOWABLE AREA [6]
FIXED:	U=0.38 ASSEMBLY MAXIMUM. [5] SHGC=0.38 ASSEMBLY MAXIMUM. [5]
ENTRANCE DOORS:	U=0.60 ASSEMBLY MAXIMUM. [5] SHGC=0.38 ASSEMBLY MAXIMUM. [5]
AIR BARRIER:	INSTALL CONTINUOUS AIR BARRIER AT BUILDING THERMAL ENVELOPE. COMPLY WITH WSEC SECTION C402.5.1.1 CONSTRUCTION REQUIREMENTS. [7]

WSEC SECTION C406 EFFICIENCY PACKAGES:

BUILDING SHALL ACHIEVE A MINIMUM OF SIX CREDITS FROM TABLE C406.1:

BUILDING OCCUPANCY: GROUP B / GROUP S

CODE SECTION	CREDITS
1. REDUCED LIGHTING POWER (OPTION 1) ACCORDANCE WITH SECTION C406.3.1	2.0
2. ENHANCED ENVELOPE PERFORMANCE ACCORDANCE WITH SECTION C406.10	4.0

FOOTNOTES:

[1] WALL ASSEMBLY (ABOVE GRADE):

STEEL FRAMED: (INSULATED METAL PANEL SIDING)

R-VALUE PROVIDED: R-21 & R-21.6 IMP SYSTEM (C.I.)
UNINSULATED STUD CAVITY (STUD CAVITY)
(1) LAYER OF 2" THICK EXTRUDED POLYSTYRENE (XPS) INSULATION BOARD. (C.I.)

[2] WALL ASSEMBLY (BELOW GRADE):

MASS:

R-VALUE PROVIDED: R-10 (C.I.)
(1) LAYER OF 2" THICK EXTRUDED POLYSTYRENE (XPS) INSULATION BOARD. (C.I.)

[3] ROOF ASSEMBLY (ABOVE DECK):

R-VALUE PROVIDED: R-37.2 (C.I.)
(2) LAYERS OF 3.5" THICK EXTRUDED POLYSTYRENE (XPS) INSULATION BOARD. (C.I.)
COMPLY WITH WSEC SECTION C303.2.2 (MULTIPLE LAYERS OF CONTINUOUS INSULATION)

INSULATION MATERIAL: FLAME SPREAD INDEX = [A] SMOKE-DEVELOPMENT INDEX = [A]

[A] ROOF INSULATION IN ACCORDANCE TO IBC SECTION 720.5.

[4] SLAB-ON-GRADE:

UNHEATED SLABS:

R-VALUE PROVIDED: R-10 (C.I.) AT BUILDING PERIMETER.
PROVIDE THERMAL BREAK AT SLAB PERIMETER. EXTEND INSULATION VERTICALLY FROM TOP OF SLAB TO TOP OF FOOTING; EXTEND INSULATION A MINIMUM 24" BELOW SLAB DEPTH.

(1) LAYER OF 2" THICK EXTRUDED POLYSTYRENE (XPS) INSULATION BOARD. (C.I.)

[5] INSULATING GLASS UNIT: DOUBLE PANE SEALED UNIT. REFER TO SPECIFICATIONS.

[6] FENESTRATION MAXIMUM AREA:

MAXIMUM ALLOWABLE VERTICAL FENESTRATION AREA = 30% OF THE TOTAL BUILDING GROSS ABOVE-GRADE WALL AREA.

CALCULATED VERTICAL FENESTRATION AREA = 27%

GROSS AREA OF EXTERIOR:

WALLS	:	16,888 SF
VERTICAL FENESTRATION	:	4,934 SF

[7] AIR LEAKAGE - THERMAL ENVELOPE: COMPLY WITH WSEC SECTION C402.5.

AIR BARRIER: COMPLY WITH WSEC SECTION C402.5.1.

THE AIR BARRIER SHALL BE CONTINUOUS FOR ALL ASSEMBLIES THAT ARE THE THERMAL ENVELOPE OF THE BUILDING AND ACROSS THE JOINTS AND ASSEMBLIES. AIR BARRIER JOINTS, SEAMS AND PENETRATIONS SHALL BE SEALED AND SECURELY INSTALLED SO AS NOT TO DISLODGE, LOOSEN OR OTHERWISE IMPAIR ITS ABILITY TO RESIST POSITIVE AND NEGATIVE PRESSURE FROM WIND, STACK EFFECT AND MECHANICAL VENTILATION.

BUILDING TEST: COMPLY WITH WSEC SECTION C402.5.1.2.

THE COMPLETED BUILDING SHALL BE TESTED AND THE AIR LEAKAGE RATE OF THE BUILDING ENVELOPE SHALL COMPLY WITH WSEC SECTION C402.5.1.2.

GENERAL NOTES

1. ALL INSULATION MATERIALS SHALL BE INSTALLED ACCORDING TO THE MANUFACTURER'S INSTRUCTIONS TO ACHIEVE PROPER DENSITIES, MAINTAIN CLEARANCES AND MAINTAIN UNIFORM R-VALUES. INSULATE MISCELLANEOUS GAPS AND VOIDS. COMPLY WITH WSEC SECTION C303.2 INSTALLATION REQUIREMENTS.
2. VAPOR RETARDER SHALL BE INSTALLED ON THE WARM SIDE OF INSULATION. TAPE SEAL BUTT ENDS, LAPPED FLANGES, PENETRATIONS, TEARS OR CUTS IN MEMBRANE. EXTEND VAPOR RETARDER TIGHT TO FULL PERIMETER OF WINDOW FRAMES, DOOR FRAMES, LOUVERS, METAL DECK AND OTHER ITEMS INTERRUPTING THE PLANE OF MEMBRANE. TAPE SEAL ENDS OF VAPOR RETARDER TO FRAMES, METAL DECK AND OTHER ITEMS. VAPOR RETARDERS TO COMPLY WITH IBC SECTION 1404.3.
3. ALL INSULATION R-VALUES INDICATED FOR ASSEMBLY TYPES ARE MINIMUMS.
4. EXTRUDED POLYSTYRENE (XPS) RIGID INSULATION R-VALUE: R-5.0 PER 1" THICKNESS (MAXIMUM CALCULATION).

   INSULATION MATERIAL: FLAME SPREAD INDEX = 10. SMOKE-DEVELOPMENT INDEX = 175.
5. POLYISOCYANURATE (ISO) RIGID INSULATION R-VALUE: R-5.7 (LTTR) PER 1" THICKNESS (MAXIMUM CALCULATION).
6. EXPANDED POLYSTYRENE (EPS) RIGID INSULATION R-VALUE: R-3.6 PER 1" THICKNESS (MAXIMUM CALCULATION).
7. MINERAL WOOL INSULATION R-VALUE: R-4.2 PER 1" THICKNESS (MAXIMUM CALCULATION).

   INSULATION MATERIAL: FLAME SPREAD INDEX = 0. SMOKE-DEVELOPMENT INDEX = 0.
8. POLYISOCYANURATE FOAM (PIR) INSULATION R-VALUE: R-5.7 (LTTR) PER 1" THICKNESS (MAXIMUM CALCULATION).
9. BUILDING ENVELOPE SHALL COMPLY WITH 2018 WASHINGTON STATE ENERGY CODE (WSEC) REQUIREMENTS. CODE COMPLIANCE BASED ON PRESCRIPTIVE BUILDING ENVELOPE METHOD AS DEFINED IN SECTION C402 CLIMATE ZONE 4C (MARINE) AS DEFINED IN TABLE C301.1. COMPLY WITH BUILDING ENVELOPE REQUIREMENTS DEFINED IN CHAPTER 4.
10. ABBREVIATIONS:

    (C.I.) = CONTINUOUS INSULATION. INSULATING MATERIAL THAT IS CONTINUOUS ACROSS ALL STRUCTURAL MEMBERS WITHOUT THERMAL BRIDGES OTHER THAN FASTENERS AND SERVICE OPENINGS.
    (LS) = LINER SYSTEM. A CONTINUOUS VAPOR BARRIER LINER MEMBRANE THAT IS INSTALLED BELOW THE PURLINS AND THIS IS UNINTERRUPTED BY FRAMING MEMBERS.
    (INT) = INTERMEDIATE FRAMING METHOD. REFER TO WSEC APPENDIX A SECTION A103 FOR REQUIREMENTS.
11. PACK MINERAL WOOL INSULATION AROUND DOOR FRAME, WINDOW FRAME AND LOUVER FRAME VOIDS AND GAPS; INSTALL MINERAL WOOL INSULATION AT EXTERIOR BUILDING ASSEMBLY EXPANSION JOINTS, CONTROL JOINTS AND OTHER MISCELLANEOUS JOINTS, VOIDS AND GAPS.
12. BUILDING THERMAL ENVELOPE INSPECTION: COMPLY WITH WSEC SECTION 104 REQUIREMENTS. WORK SHALL NOT BE DONE BEYOND THE POINT INDICATED IN EACH SUCCESSIVE INSPECTION WITHOUT FIRST OBTAINING THE APPROVAL OF THE CODE OFFICIAL AND THE ARCHITECT. ANY PORTIONS OF WORK THAT DO NOT COMPLY SHALL BE CORRECTED AND SUCH PORTION SHALL NOT BE COVERED OR CONCEALED UNTIL AUTHORIZED BY THE CODE OFFICIAL AND APPROVED BY THE ARCHITECT. INSPECTIONS SHALL INCLUDE THE FOLLOWING: (1) WALL INSULATION; TO BE MADE AFTER ALL WALL INSULATION AND VAPOR BARRIER ARE IN PLACE, BUT BEFORE ANY WALL COVERING IS PLACED. (2) GLAZING INSPECTION; TO BE MADE AFTER GLAZING MATERIALS ARE INSTALLED IN THE BUILDING. (3) EXTERIOR ROOFING INSULATION; TO BE MADE AFTER INSTALLATION OF THE ROOFING INSULATION, BUT BEFORE CONCEALMENT. (4) SLAB AND FLOOR INSULATION; TO BE MADE AFTER THE INSTALLATION OF THE SLAB AND FLOOR INSULATION, BUT BEFORE CONCEALMENT.
13. BUILDING THERMAL ENVELOPE INSULATION: AN R-VALUE IDENTIFICATION MARK SHALL BE APPLIED BY THE MANUFACTURER TO EACH PIECE OF BUILDING THERMAL ENVELOPE INSULATION 12 INCHES OR GREATER IN WIDTH. COMPLY WITH WSEC SECTION C303.1.1 BUILDING THERMAL ENVELOPE INSULATION AND WSEC SECTION C303.1.2 INSULATION MARK INSTALLATION REQUIREMENTS.
14. FENESTRATION PRODUCT RATING: U-FACTORS OF FENESTRATION PRODUCTS SHALL BE DETERMINED IN ACCORDANCE WITH NFRC 100. THE SOLAR HEAT GAIN COEFFICIENT (SHGC) AND VISIBLE TRANSMITTANCE (VT) OF GLAZED FENESTRATION PRODUCTS SHALL BE DETERMINED IN ACCORDANCE WITH NFRC 200. COMPLY WITH WSEC SECTION C303.1.3 FENESTRATION PRODUCT RATING REQUIREMENTS.
15. AIR BARRIER (BUILDING TEST): THE COMPLETED BUILDING SHALL BE TESTED AND THE AIR LEAKAGE RATE OF THE BUILDING ENVELOPE SHALL NOT EXCEED THE MAXIMUM AIR LEAKAGE RATE DEFINED IN WSEC SECTION C402.5.1.2. COMPLY WITH WSEC SECTION C402.5.1.2 BUILDING TESTING REQUIREMENTS.
16. INSULATING MATERIALS, INCLUDING FACINGS SUCH AS VAPOR RETARDERS AND VAPOR-PERMEABLE MEMBRANES, SIMILAR COVERINGS AND ALL LAYERS OF SINGLE AND MULTIPLE REFLECTIVE FOIL INSULATION SHALL COMPLY WITH THE REQUIREMENTS OF IBC SECTION 720. WHERE A FLAME SPREAD INDEX OR A SMOKE-DEVELOPMENT INDEX IS SPECIFIED, SUCH INDEX SHALL BE DETERMINED IN ACCORDANCE WITH ASTM E84 OR UL723.

    CONCEALED INSTALLATION: INSULATING MATERIALS WHERE CONCEALED AS INSTALLED IN BUILDINGS OF ANY CONSTRUCTION SHALL HAVE A FLAME SPREAD INDEX OF NOT MORE THAN 25 AND A SMOKE-DEVELOPMENT INDEX OF NOT MORE THAN 450.

    EXPOSED INSTALLATION: INSULATING MATERIALS WHERE EXPOSED AS INSTALLED IN BUILDINGS OF ANY CONSTRUCTION SHALL HAVE A FLAME SPREAD INDEX OF NOT MORE THAN 25 AND A SMOKE-DEVELOPMENT INDEX OF NOT MORE THAN 450.

    ROOF INSULATION: USE OF COMBUSTIBLE ROOF INSULATION NOT COMPLYING WITH IBC SECTION 720.2 AND 720.3 SHALL BE PERMITTED IN ANY CONSTRUCTION PROVIDED THAT INSULATIONS COVERED WITH APPROVED ROOF COVERINGS DIRECTLY APPLIED THERETO; IN ACCORDANCE TO IBC SECTION 720.5.
17. BUILDING DOCUMENTATION AND CLOSE OUT SUBMITTAL REQUIREMENTS: COMPLY WITH WSEC SECTION C103.6.
18. RECESSED LUMINARIES INSTALLED IN THE BUILDING THERMAL ENVELOPE TO COMPLY WITH WSEC SECTION C402.5.8.
19. MECHANICAL SYSTEMS: COMPLY WITH WSEC SECTION C403. REFER TO MECHANICAL DRAWINGS.
20. SERVICE WATER HEATING AND PRESSURE-BOOSTER SYSTEMS: COMPLY WITH WSEC SECTION C404. REFER TO MECHANICAL DRAWINGS.
21. ELECTRICAL POWER AND LIGHTING SYSTEMS: COMPLY WITH WSEC SECTION C405. REFER TO ELECTRICAL DRAWINGS.

Helix
design group

AMERICAN INSTITUTE OF ARCHITECTS

6934 REGISTERED ARCHITECT
LOWELL CATE
STATE OF WASHINGTON

HELIX DESIGN GROUP, INC

BUILDING THERMAL ENVELOPE LEGEND

CITY OF FEDERAL WAY FLEET & SHOP BUILDING

FEDERAL WAY, WASHINGTON

REVISION	DATE

DATE	JOB NO.
05.06.24	a23-087

BID SET

AB035

DRAWING NO.

© HELIX DESIGN GROUP, INC.: All rights reserved. No part of this document may be reproduced in any form or by any means without permission in writing from Helix Design Group.

UNOFFICIAL COPY Official bid documents, plan holder's list, and addenda (if applicable) are available on BXWA.com

PLOTTED: 5/10/2024 3:30:04 PM PROJECT: a23-087 - CITY OF FEDERAL WAY
FILE PATH: C:\Shive\Revit_Local_2022\a23-087 Fed Way OMF - Bldg B_CENTRAL_r22_EBackstrom.rvt

COLOR AND MATERIALS NOTES

NOTES

[1] MDO SHEETS STAGGERED IN HORIZONTAL PATTERN, 1/4" CHAMFERED EDGE ALL SIDES.

[2] REFER TO STOREFRONT/WINDOW SYSTEM SCHEDULE.

[3] FRAME TO MATCH ADJACENT SIDING COLOR / INSULATED DOORS AND THERMAL BREAK FRAMES.

[4] DOOR AND FRAME TO MATCH ADJACENT SIDING COLOR / INSULATED DOORS AND THERMAL BREAK FRAMES.

[5] PROVIDE GOJO SHIELD FLOOR AND WALL PROTECTOR FOR WALL MOUNTED SOAP DISPENSER NOT OVER COUNTER TOPS. SKU: 2762-06.

[6] INTERIOR EXPOSED STEEL FRAMING IN WASH BAY, WASH BAY EQUIPMENT ROOM, SPRINKLER ROOM.

[7] ALL INTERIOR AND EXTERIOR STEEL FRAMING EXCEPT IN WASH BAY, WASH BAY EQUIPMENT ROOM, SPRINKLER ROOM.

SPECIFICATION NOTES

GENERAL NOTES:

1. STANDARD ABBREVIATIONS LIST: REFER TO 'VOLUME 0' - SHEET G020.
2. INSTALL MATERIALS AND PRODUCTS IN ACCORDANCE TO MANUFACTURER'S INSTALLATION INSTRUCTIONS, SPECIFICATIONS, DETAILS AND WARRANTY REQUIREMENTS. PROVIDE ALL MATERIALS COMPONENTS AND ACCESSORIES FOR COMPLETE INSTALLATION.
3. REFER TO PROJECT MANUAL FOR SPECIFICATIONS OF MATERIALS AND PRODUCTS NOT INCLUDED WITHIN THE COLORS AND MATERIALS SCHEDULE.

FOOTNOTES:

[A] BASIS OF DESIGN.

TOILET ACCESSORIES SCHEDULE

SYMBOL	MATERIAL	MANUFACTURER	SPECIFICATIONS	COLOR / PATTERN / TYPE	LOCATION
TOILET ACCESSORIES					
-	CUBICLE TRACK AND CURTAIN	NIPRO CORP	SEE SPEC SECTION 10 21 23.10	FABRIC: SUPER BIO STAT BLUE	
CH-1	COAT HOOK	BOBRICK	HEAVY-DUTY CLOTHES HOOK WITH CONCEALED MOUNTING, MODEL B-216	FINISH: SATIN NICKEL PLATED	
FSS-1	FOLDING SHOWER SEAT	BOBRICK	REVERSIBLE B-5181 SOLID PHENOLIC SEAT	FINISH: SATIN STAINLESS STEEL, IVORY SEAT	
GB-1	GRAB BARS	BOBRICK	STRAIGHT GRAB BARS, MODEL B-6806	FINISH: SATIN STAINLESS STEEL	
MR-1	MIRROR	BOBRICK	CHANNEL FRAME MIRROR, MODEL B-165, SIZE: 24"X36"	FINISH: SATIN STAINLESS STEEL	
PTD-1	PAPER TOWEL DISPENSER	GEORGIA PACIFIC	RECESSED ENMOTION 8" AUTOMATED TOUCHLESS, ITEM ID 59466A	FINISH: SATIN STAINLESS STEEL	
SD-1	SOAP DISPENSER	GOJO	SURFACE-MOUNTED TFX DISPENSER, FOAM SOAP, SKU: 2789-12 [5]	FINISH: SILVER	
SNR-1	SANITARY NAPKIN RECEPTACLE	BOBRICK	SURFACE-MOUNTED SANITARY NAPKIN DISPENSE, MODEL B-254, CLASSIC SERIES	FINISH: SATIN STAINLESS STEEL	
TPD-1	TOILET PAPER DISPENSER	GEORGIA PACIFIC	SURFACE-MOUNTED TOILET TISSUE DISPENSER, TWO-ROLL, JUMBO JR. HIGH CAPACITY ID 59210	COLOR: BLACK	
TSCD-1	TOILET SEAT COVER DISPENSER	BOBRICK	SURFACE-MOUNTED SEAT-COVER DISPENSER, MODEL B-221, CLASSIC SERIES	FINISH: SATIN STAINLESS STEEL	
WR-1	WASTE RECEPTACLE	BOBRICK	FLOOR-STANDING LARGE CAPACITY WASTE RECEPTACLE, MODEL B-2400	FINISH: SATIN STAINLESS STEEL	(1) PER TOILET ROOM

COLORS AND MATERIALS SCHEDULE

SYMBOL	MATERIAL	MANUFACTURER [A]	COLOR / PATTERN / TYPE	LOCATION
DIVISION 3 - CONCRETE				
CONC-1	ARCHITECTURAL CONCRETE	-	COLOR: NATURAL GRAY / SMOOTH FINISH. COLOR: PT-1	EXPOSED VERTICAL SURFACES - EXTERIOR
CONC-2	ARCHITECTURAL CONCRETE	-	COLOR: NATURAL GRAY / LIGHT BROOM FINISH. COLOR: PT-1	EXPOSED HORIZONTAL SURFACES - EXTERIOR
CONC-3	ARCHITECTURAL CONCRETE	-	COLOR: NATURAL GRAY / SMOOTH TROWEL FINISH. COLOR: PT-1	EXPOSED HORIZONTAL SURFACES - INTERIOR
DIVISION 4 - MASONRY				
CMU-1	CONCRETE MASONRY UNIT	MUTUAL MATERIALS	COLOR: CASCADE BLEND, DRIFTWOOD AND ONYX / EQUAL BLEND / GROUND FACE BLOCK	EXTERIOR FACADE, WAINSCOT
M-1	MORTAR	DESIGNMIX	COLOR: GRAY	REFER TO EXTERIOR ELEVATIONS
DIVISION 5 - METALS				
MF-1	METAL FABRICATIONS	-	COLOR: GALVANIZED PT-2	EXTERIOR COLOR
MF-2	METAL FABRICATIONS	-	COLOR: GALVANIZED PT-3	EXTERIOR COLOR
STL-1	STRUCTURAL STEEL FRAMING, JOIST AND DECK	-	COLOR: GALVANIZED PT-3	[7]
STL-2	STRUCTURAL STEEL FRAMING, JOIST AND DECK	-	COLOR: GALVANIZED PT-4	[6]
DIVISION 6 - WOOD - PLASTICS - COMPOSITES				
FRP-1	FIBER REINFORCED PLASTIC	CRANE COMPOSITES	COLOR: MORNING MIST GRAY (636)	REFER TO INTERIOR ELEVATIONS
MDF-1	MEDIUM DENSITY FIBERBOARD	-	COLOR: CLEAR SEALER	
MDO-1	MEDIUM DENSITY OVERLAY PLYWOOD	-	(1) PT-B EXTERIOR RATED	
PVC-1	PVC WALL PANELS	CURAMAX BUILDING PRODUCTS	COLOR: WHITE	WASH BAY
DIVISION 7 - THERMAL AND MOISTURE PROTECTION				
IMP-1	INSULATED METAL PANEL	KINGSPAN	COLOR: MOONSTONE RAL 7035, KS SERIES/KS MINI NCRO-RIT/HORIZONTAL INSTALLAION	
IMP-2	INSULATED METAL PANEL	KINGSPAN	COLOR: CUSTOM COLOR, CHARCOAL RAL 7024, VALE/VERTICAL INSTALLATION	
IMP-3	INSULATED METAL PANEL	KINGSPAN	KARRIERPANEL/HORIZONAL INSTALLAION	
MES-1	MECHANICAL EQUIPMENT SCREEN	-	COLOR: POWDER COATED FINISH, SILVER SATIN	REFER TO ROOF PLAN
MTL-1	METAL FLASHING AND TRIM	-	COLOR: MATCH STANDING SEAM METAL ROOFING 55MR-1	
MTL-2	METAL FLASHING AND TRIM	-	COLOR: MATCH IMP-1	
MTL-3	METAL FLASHING AND TRIM	-	COLOR: MATCH IMP-2	
MTL-4	METAL FLASHING AND TRIM	-	COLOR: MATCH STOREFRONT SYSTEM COLOR	
RAH	ROOF ACCESS HATCH	BILCO	COLOR: WHITE	REFER TO ROOF PLAN
SPMR-1	SINGLE-PLY MEMBRANE ROOFING	CARLISLE SYNTEC	COLOR: WHITE	
SSMR-1	STANDING SEAM METAL ROOFING	AEP SPAN	COLOR: SILVERSMITH, DESIGN SPAN HP	
DIVISION 8 -OPENINGS				
GL-1	INSULATED GLAZING	VITRO ARCHITECTURAL GLASS	COLOR: SOLARBAN 60 (2) CLEAR + CLEAR (ARGON GAS).	
HDW-1	HARDWARE	REFER TO SECTION 08 71 00	FINISH: US32D SATIN STAINLESS STEEL	DOOR HARDWARE
HM-1	HOLLOW METAL DOOR AND FRAME	CEDO	DOOR: PT-7, [3]	EXTERIOR
HM-2	HOLLOW METAL DOOR AND FRAME	CEDO	[4]	EXTERIOR
HM-3	HOLLOW METAL DOOR AND FRAME	CEDO	DOOR, FRAME, AND RELITES: PT-D	INTERIOR
LVR-1	LOUVER	C/S GROUP	COLOR: MATCH ADJACENT SIDING COLOR	
RSD-1	ROLLING SERVICE DOOR	OVERHEAD DOOR COMPANY	COLOR: SILVER MATCH STANDING SEAM METAL ROOF COLOR	
SF-1	STOREFRONT SYSTEM	KAWNEER	COLOR: CLEAR ANODIZED. [2]	
TW-1	TRANSLUCENT WINDOW SYSTEM	KINGSPAN	COLOR: CLEAR ANODIZED FRAME, CRYSTAL / WHITE TRANSLUSENT PANEL	[2]
DIVISION 9 - FINISHES				
ACT-1	ACOUSTICAL CEILING TILE	ARMSTRONG CEILINGS	COLOR: WHITE	REFER TO REFLECTED CEILING PLAN
ESB	EXTERIOR GYPSUM SOFFIT BOARD	AMERICAN GYPSUM		
GT-1	GROUT	FLEXTILE	COLOR: CHARCOAL	USE WITH TL-2 AND TL-8
PT-1	CONCRETE SEALER	REFER TO SPEC SECTION 03 30 00	COLOR: CLEAR SEALER	REFER TO SPEC SECTION 03 30 00
PT-2	PAINT	SHERWIN WILLIAMS	GALVANIZED, COLOR: CHEERFUL (SW6903) SAFETY YELLOW	REFER TO EXTERIOR ELEVATIONS
PT-3	PAINT	SHERWIN WILLIAMS	GALVANIZED, COLOR: WEB GRAY (SW 7905)	REFER TO EXTERIOR ELEVATIONS
PT-4	PAINT - MARINE GRADE EPOXY	PAINT - MARINE GRADE EPOXY	GALVANIZED, MARINE GRADE EPOXY FINISH, COLOR: WHITE	WASH BAY AND EQUIPMENT ROOM
PT-7	PAINT	SHERWIN WILLIAMS	COLOR: SW 6185 MAREA BAJA	
PT-B	PAINT	SHERWIN WILLIAMS	COLOR: SW 7657 TINSMITH	GENERAL GWB WALLS
PT-C	PAINT	SHERWIN WILLIAMS	COLOR: SW 7757 HIGH REFLECTIVE WHITE	GWB CEILINGS
PT-D	PAINT	SHERWIN WILLIAMS	COLOR: SW 7068 GRIZZLE GRAY	HOLLOW METAL DOOR, FRAMES, AND RELITES
PT-L	PAINT	SHERWIN WILLIAMS	COLOR: SW 7646 FIRST STAR	EXPOSED ROOF STRUCTURE & EXPOSED DUCTS, U.N.O.
RB-1	RUBBER BASE	ROPPE	COLOR: 123 CHARCOAL	
RSNF-1	RESINOUS FLOORING	SHERWIN WILLIAMS	COLOR: GREY LINEN	
TL-2	TILE	UNITED TILE (PORTOBELLO)	COLOR: GREIGE	REFER TO INTERIOR ELEVATIONS
TL-8	TILE	UNITED TILE (PORTOBELLO)	COLOR: GREIGE	REFER TO INTERIOR ELEVATIONS
TR-1	FLOORING TRANSITION	SCHLUTER SYSTEMS	FINISH: (EB) BRUSHED STAINLESS STEEL	EDGE PROTECTION, RSNF TO TL COVE BASE
TR-2	FLOORING TRANSITION	SCHLUTER SYSTEMS	FINISH: (EB) BRUSHED STAINLESS STEEL	HOMYRSNF TO CONC
WOM-2	WALK OFF MAT	MILLIKEN	COLOR: CNXIM DARK GREY	GENERAL
DIVISION 10 - SPECIALTIES				
-	OVERHEAD DOOR TRACK PROTECTOR	-	COLOR: SAFETY YELLOW	WASH BAY OVERHEAD ROLLING SERVICE DOORS
-	WIRE MESH PARTITION STORAGE ENCLOSURE SYSTEM	THE G-S COMPANY	COLOR: SILVER, POWDER COATED / SURE-GUARD TM	
BC-1	BOLLARD COVER (HDPE)	-	COLOR: SAFETY YELLOW	
DIVISION 12 - FURNISHINGS				
PLAM-4	PLASTIC LAMINATE	FORMICA	COLOR: 8824-58 WHITE DROPS / FINISH: MATTE	REFER TO INTERIOR ELEVATIONS
PLAM-5	PLASTIC LAMINATE	FORMICA	COLOR: 3704-58 BURNISHED IRON / FINISH: MATTE	REFER TO INTERIOR ELEVATIONS
RS-1	ROLLER SHADES	MECHO SHADE SYSTEMS	SHADE CLOTH: 1520 SHADOW GRAY / FASCIA: CLEAR ANODIZED	

Helix design group

AMERICAN INSTITUTE OF ARCHITECTS

8934 REGISTERED ARCHITECT FLOWEL GATE STATE OF WASHINGTON

HELIX DESIGN GROUP, INC

COLORS AND MATERIALS SCHEDULE

CITY OF FEDERAL WAY FLEET & SHOP BUILDING

FEDERAL WAY, WASHINGTON

REVISION	DATE

DATE	JOB NO.
05.06.24	a23-087

BID SET

AB040

DRAWING NO.

© HELIX DESIGN GROUP, INC.: All rights reserved. No part of this document may be reproduced in any form or by any means without permission in writing from Helix Design Group.

PLOTTED: 5/10/2024 3:30:05 PM PROJECT: a23-087 - CITY OF FEDERAL WAY
FILE PATH: C:\Users\Kevin\Local\2022\a23-087 Fed Way OFF - Bldg B-CENTRAL_22.1Basicsrvm.rvt

UNOFFICIAL COPY Official bid documents, plan holder's list, and addenda (if applicable) are available on BXWA.com

FLOOR PLAN LEGEND

DESCRIPTION	SYMBOL AND TEXT
ROOM IDENTIFICATION room name room number	ROOM NAME 100
CONTROL JOINTS control joints per structural detail.	

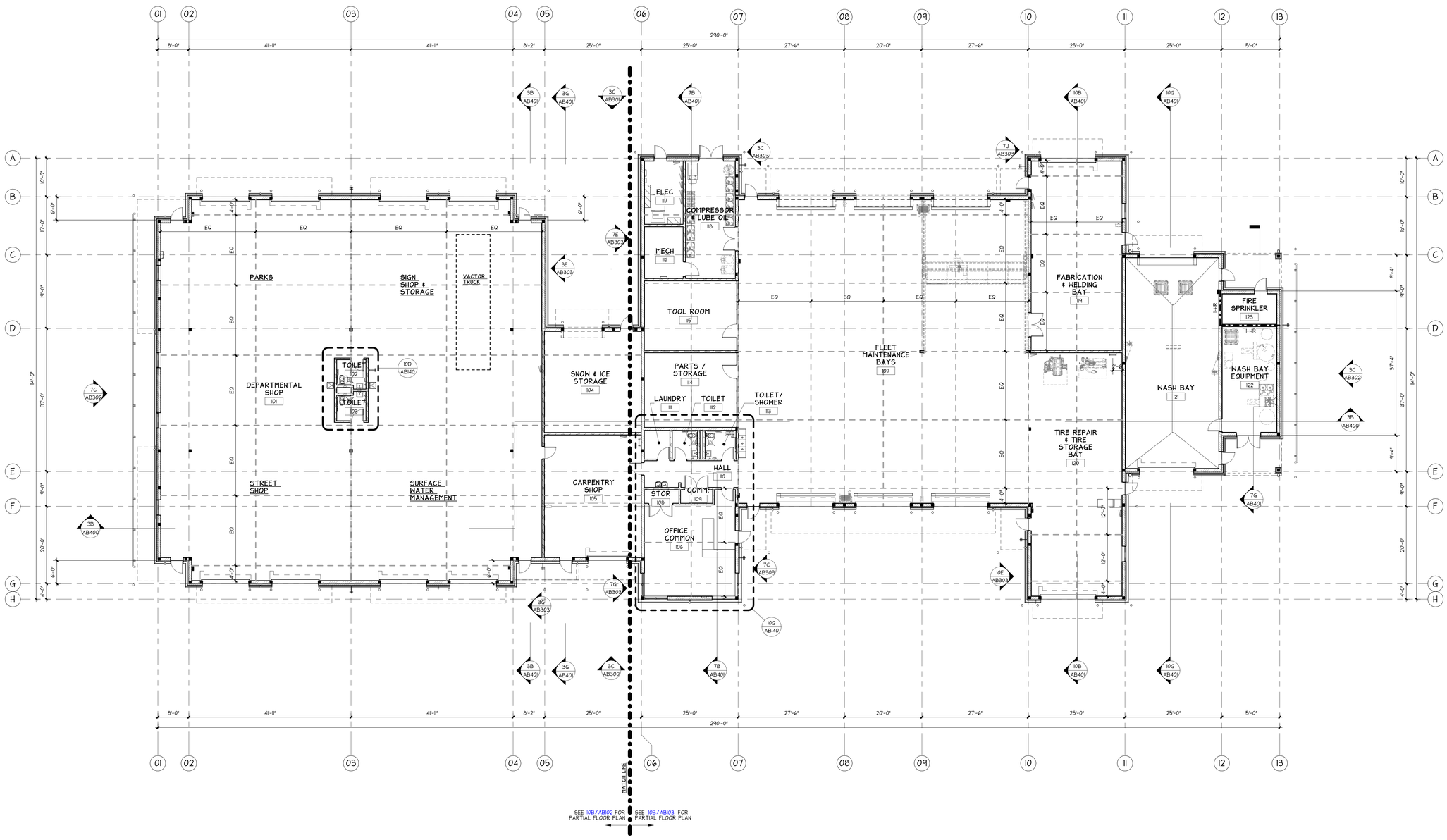

10A COMPOSITE FLOOR PLAN

3/32" = 1'-0"

NORTH

SCALE: 3/32" = 1'-0"

*****UNOFFICIAL COPY***** Official bid documents, plan holder's list, and addenda (if applicable) are available on BXWA.com

PLOTTED: 5/10/2024 3:30:07 PM PROJECT: a23-087 – CITY OF FEDERAL WAY
FILE PATH: C:\Shared\Revit\Local\2022\a23-087 Fed Way OPP – Bldg B_CENTRAL_r22_EBeckstrom.rvt

Helix design group

AMERICAN INSTITUTE OF ARCHITECTS

1994 REGISTERED ARCHITECT FLOWEL CATE STATE OF WASHINGTON

HELIX DESIGN GROUP, INC

COMPOSITE FLOOR PLAN

CITY OF FEDERAL WAY FLEET & SHOP BUILDING

FEDERAL WAY, WASHINGTON

REVISION	DATE

DATE	JOB NO.
05.06.24	a23-087

BID SET

AB100

DRAWING NO.

© HELIX DESIGN GROUP, INC.: All rights reserved. No part of this document may be reproduced in any form or by any means without permission in writing from Helix Design Group.

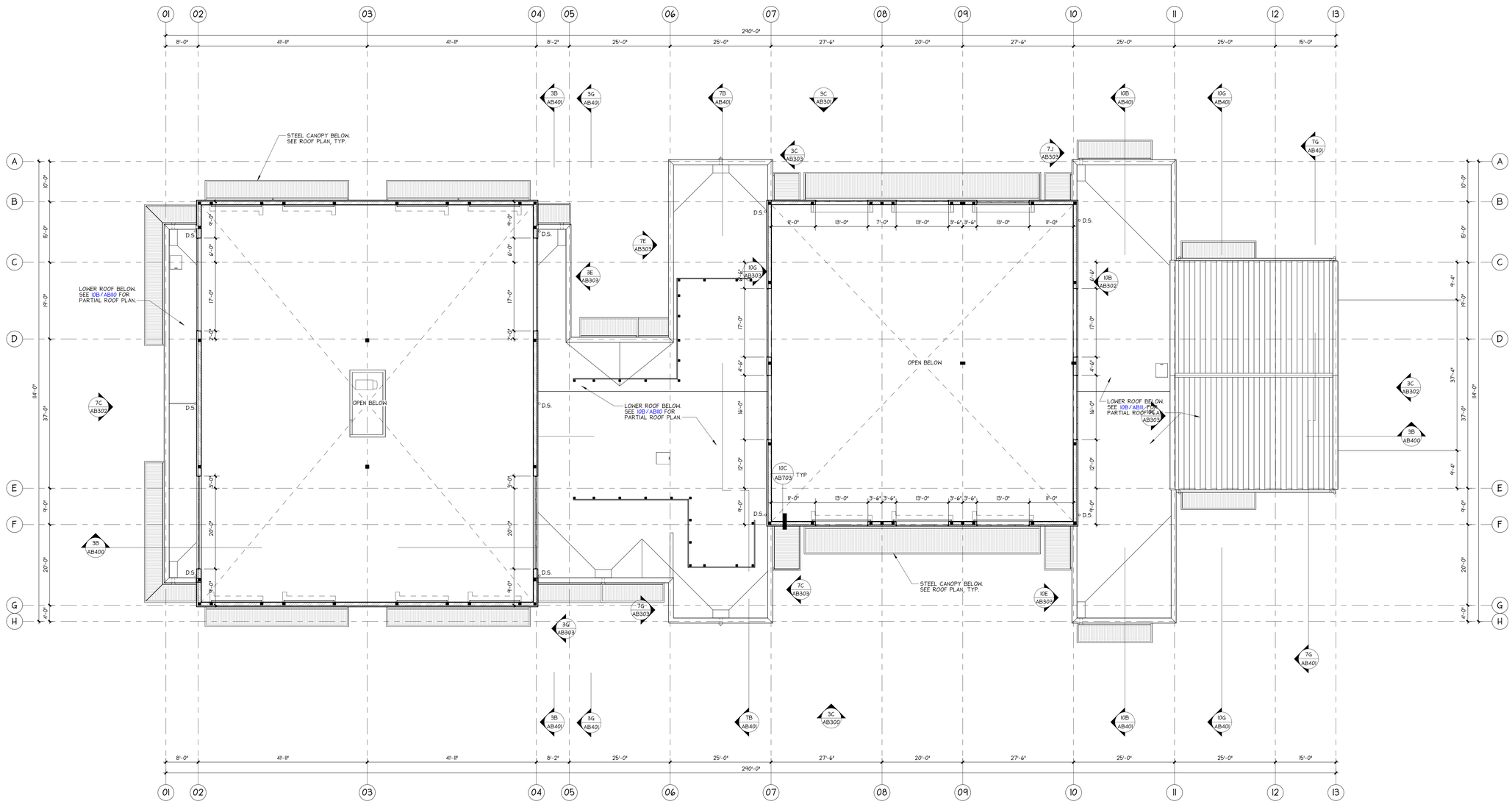

10A COMPOSITE FLOOR PLAN - UPPER WALLS

3/32" = 1'-0"

NORTH

SCALE: 3/32" = 1'-0"

UNOFFICIAL COPY Official bid documents, plan holder's list, and addenda (if applicable) are available on BXWA.com

PLOTTED: 5/10/2024 3:30:06 PM PROJECT: a23-087 - CITY OF FEDERAL WAY
FILE PATH: G:\Shared\Revit_Local_\2023\a23-087 Fed Way OPF - Bldg B_CENTRAL_22.EBasbirsment

Helix design group

AMERICAN INSTITUTE OF ARCHITECTS

8934 REGISTERED ARCHITECT FLOWEL GATE STATE OF WASHINGTON

HELIX DESIGN GROUP, INC

COMPOSITE FLOOR PLAN - UPPER WALLS

CITY OF FEDERAL WAY FLEET & SHOP BUILDING

FEDERAL WAY, WASHINGTON

REVISION	DATE

DATE	JOB NO.
05.06.24	a23-087

BID SET

AB101

DRAWING NO.

© HELIX DESIGN GROUP, INC.: All rights reserved. No part of this document may be reproduced in any form or by any means without permission in writing from Helix Design Group.

FLOOR PLAN LEGEND

DESCRIPTION	SYMBOL AND TEXT
ROOM IDENTIFICATION room name room number	ROOM NAME 100
SWINGING DOOR door number, minimum door strike side clearance distances	101 1'-6" MIN 1'-0" 6"
WORK POINT building corner, starting building layout reference point	WP
FLOOR DRAIN sloped floor level floor	F.D. F.D.
STRUCTURAL COLUMN centered on grid line and, or centered in wall	
FIRE EXTINGUISHERS fire extinguisher in surface-mounted cabinet	F.E.
HOSE BIB refer to plumbing plan for locations	H.B.
JANITORS SINK square corner janitor floor sink	
DOWNSPOUT refer to plan for size and locations	D.S.
BOLLARD 6" DIA. UNO refer to plan for locations	B

WALL TYPES

DESCRIPTION	SYMBOL AND TEXT
WALL TYPE 1 3 5/8" METAL STUDS @ 16" O.C.	
WALL TYPE 2 6" METAL STUDS @ 16 O.C.	
WALL TYPE 3 8" METAL STUDS @ 16" O.C.	
WALL TYPE 4 CAST-IN-PLACE CONCRETE	

GENERAL NOTES

NOTE

1. REFER TO SHEET G020 FOR STANDARD ABBREVIATIONS LIST.
2. INSTALL SOUND BATT INSULATION AT ALL INTERIOR (STUD) WALLS.
3. CONCRETE FLOOR SLOPE TO DRAIN TO SERVICE DOOR OPENING, TYPICAL.
4. REFER TO EQUIPMENT PLAN (IP SERIES) FOR EQUIPMENT CALLOUTS. ALL EQUIPMENT SHOWN ON THIS PLAN ARE BASE BID UNLESS NOTED OTHERWISE.

FLOOR PLAN NOTES

SYMBOL	NOTE
F01	OUTLINE OF CANOPY ABOVE
F02	TRAFFIC GUARDRAIL BARRIER. REFER TO CIVIL DRAWINGS.
F03	ALUMINUM ROOF ACCESS LADDER
F04	ROOF ACCESS HATCH ABOVE
F05	OUTLINE OF ROOF ABOVE

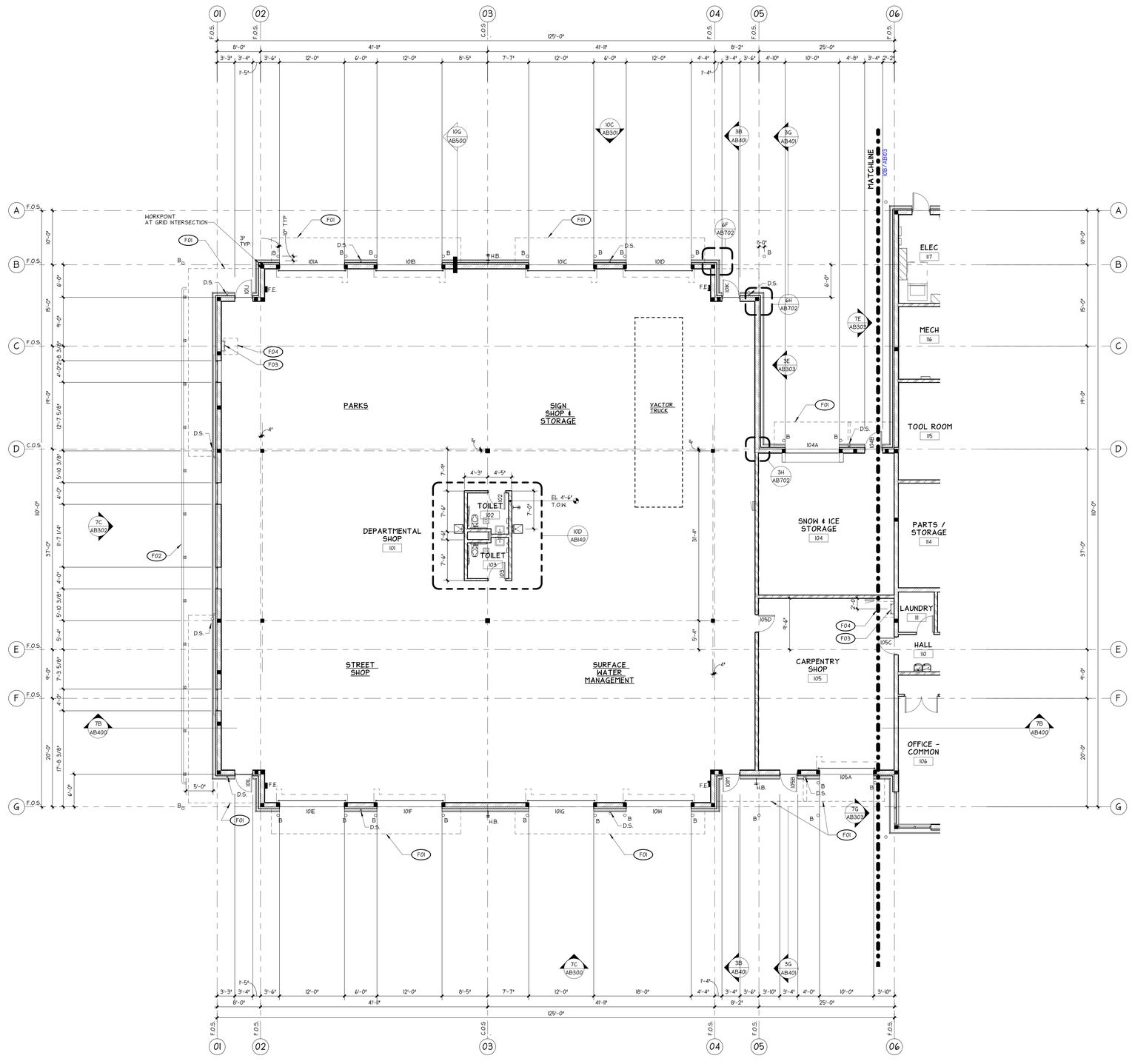

10B PARTIAL FLOOR PLAN - SOUTH
1/8" = 1'-0"

NORTH

SCALE: 1/8" = 1'-0"

UNOFFICIAL COPY Official bid documents, plan holder's list, and addenda (if applicable) are available on BXWA.com

PLOTTED: 5/10/2024 3:35:09 PM PROJECT: a23-087 - CITY OF FEDERAL WAY
FILE PATH: C:\Shared\Revit_Local\a2023\a23-087 Fed Way OPP - Bldg B_CENTRAL_r22.2Bbeckstrom.rvt

Helix design group
AMERICAN INSTITUTE OF ARCHITECTS
1994 REGISTERED ARCHITECT FLOWELL GATE STATE OF WASHINGTON
HELIX DESIGN GROUP, INC

PARTIAL FLOOR PLAN

CITY OF FEDERAL WAY FLEET & SHOP BUILDING

FEDERAL WAY, WASHINGTON

REVISION	DATE

DATE	JOB NO.
05.06.24	a23-087

BID SET

AB102

DRAWING NO.

© HELIX DESIGN GROUP, INC.: All rights reserved. No part of this document may be reproduced in any form or by any means without permission in writing from Helix Design Group.

FLOOR PLAN LEGEND

DESCRIPTION	SYMBOL AND TEXT
ROOM IDENTIFICATION room name room number	ROOM NAME 100
SWINGING DOOR door number minimum door strike side clearance distances	101 1'-6" MIN 1'-0" 6"
WORK POINT building corner, starting building layout reference point	WP
FLOOR DRAIN sloped floor level floor	F.D. F.D.
STRUCTURAL COLUMN centered on grid line and, or centered in wall	
FIRE EXTINGUISHERS fire extinguisher in surface-mounted cabinet	F.E.
HOSE BIB refer to plumbing plan for locations	H.B.
JANITORS SINK square corner janitor floor sink	
DOWNSPOUT refer to plan for size and locations	D.S.
BOLLARD 6" DIA. UNO refer to plan for locations	B

GENERAL NOTES

NOTE

1. REFER TO SHEET G020 FOR STANDARD ABBREVIATIONS LIST.
2. INSTALL SOUND BATT INSULATION AT ALL INTERIOR (STUD) WALLS.
3. CONCRETE FLOOR SLOPE TO DRAIN TO SERVICE DOOR OPENING, TYPICAL.
4. REFER TO EQUIPMENT PLAN (6P SERIES) FOR EQUIPMENT CALLOUTS. ALL EQUIPMENT SHOWN ON THIS PLAN ARE BASE BID UNLESS NOTED OTHERWISE.

WALL TYPES

DESCRIPTION	SYMBOL AND TEXT
WALL TYPE 1 3 5/8" METAL STUDS @ 16" O.C.	
WALL TYPE 2 6" METAL STUDS @ 16" O.C.	
WALL TYPE 3 8" METAL STUDS @ 16" O.C.	
WALL TYPE 4 CAST-IN-PLACE CONCRETE	

FLOOR PLAN NOTES

SYMBOL	NOTE
F01	OUTLINE OF ROOF ABOVE
F02	TRAFFIC GUARDRAIL BARRIER
F03	ALUMINUM ROOF ACCESS LADDER
F04	ROOF ACCESS HATCH ABOVE
F05	SERVICE COILING DOOR TRACK PROTECTOR
F06	TRENCH DRAIN
F07	HOUSE KEEPING PAD(S) FOR MECHANICAL EQUIPMENT

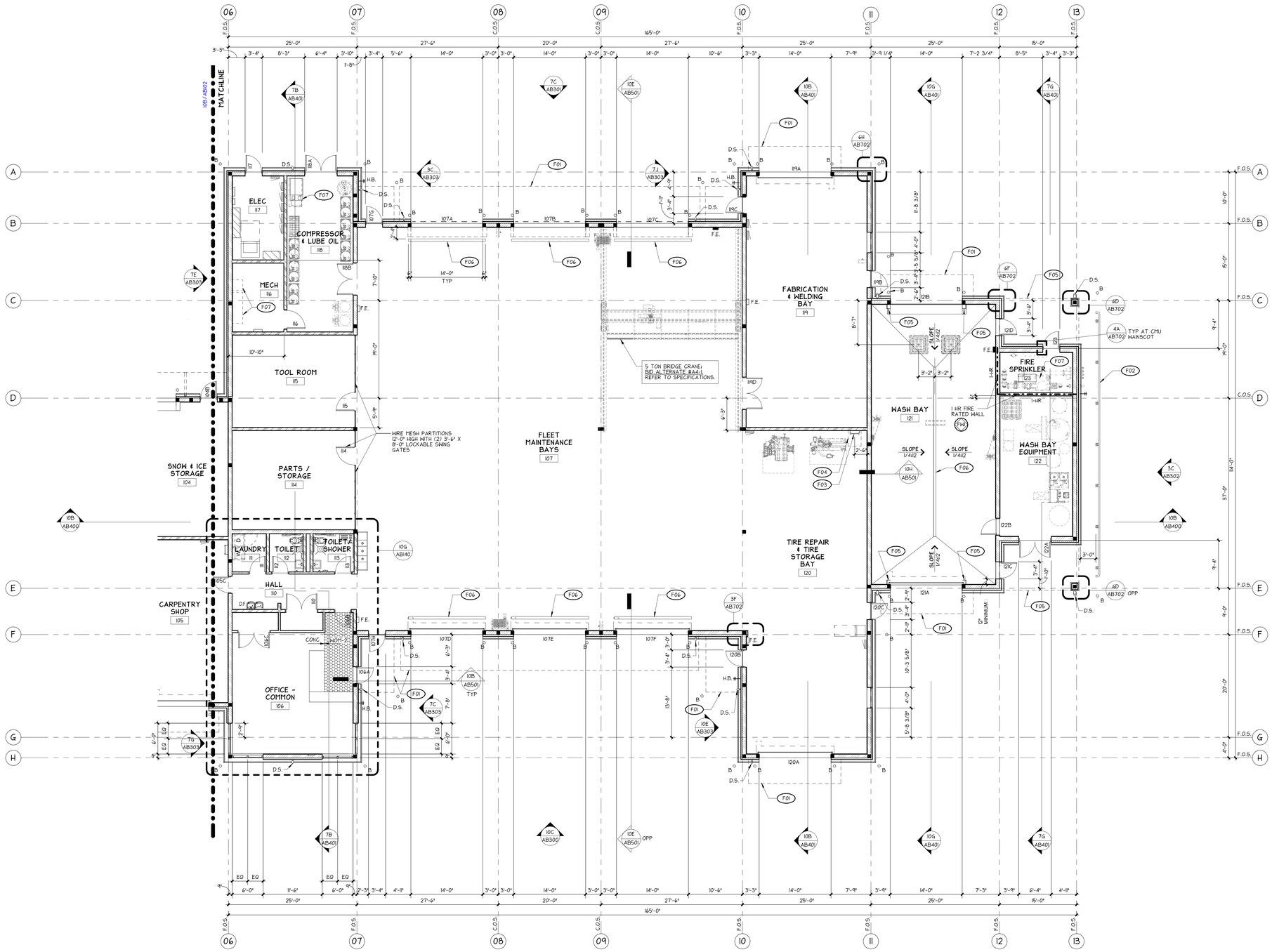

10B PARTIAL FLOOR PLAN - NORTH
1/8" = 1'-0"

NORTH

SCALE: 1/8" = 1'-0"

UNOFFICIAL COPY Official bid documents, plan holder's list, and addenda (if applicable) are available on BXWA.com

PLOTTED: 5/10/2024 3:30:28 PM
FILE PATH: G:\Shared\Revit_Local\...2022\a23-087 Fed Way OPP - Bldg B_CENTRAL_r22_EBaksirom.rvt
PROJECT: a23-087 - CITY OF FEDERAL WAY

Helix design group

AMERICAN INSTITUTE OF ARCHITECTS

1994 REGISTERED ARCHITECT FLOWELL GATE STATE OF WASHINGTON

HELIX DESIGN GROUP, INC

PARTIAL FLOOR PLAN

CITY OF FEDERAL WAY FLEET & SHOP BUILDING

FEDERAL WAY, WASHINGTON

REVISION	DATE

DATE	JOB NO.
05.06.24	a23-087

BID SET

AB103

DRAWING NO.

© HELIX DESIGN GROUP, INC.: All rights reserved. No part of this document may be reproduced in any form or by any means without permission in writing from Helix Design Group.

GENERAL NOTES

NOTE

1. REFER TO SHEET G020 FOR STANDARD ABBREVIATIONS LIST.
2. PROVIDE RAISED CURBS FOR ROOF MOUNTED HVAC UNITS AND ROOF ACCESS HVAC. 18" MINIMUM HEIGHT.
3. MAINTAIN A MINIMUM OF 1/4:12 SLOPE AT ROOF CRICKETS.
4. SLOPE METAL GUTTERS TO DOWNSPOUT.
5. PAINT ALL HVAC UNITS WHERE SCREENS ARE NOT PROVIDED. COLOR: WHITE

ROOF PLAN LEGEND

DESCRIPTION	SYMBOL AND TEXT
ROOFING IDENTIFICATION material type	SINGLE-PLY MEMBRANE ROOFING
ROOF RIDGE ridge line	RIDGE
ROOF PLANE CHANGE description, change in sloped roof planes	VALLEY
ROOF CRICKET sloped (cricket) roof plane	
SLOPE IDENTIFICATION direction indicator, rise/run	SLOPE 1/2:12
ROOF ACCESS HATCH 36" x 36" (min 16 sq ft), cricket at upside of roof slope	
HVAC UNIT unit number, unit weight, unit dimensions, hvac unit on 12" ht built-up curb with flashing system	UNIT
PARAPET WALL parapet wall	
ROOF PARAPET THROUGH-WALL SCUPPERS 2" deep recessed level sump area, through-wall sheet metal scuppers and collector head	2'-0" 4'-0"
primary scupper: 8" wide x 4" height (minimum size)	
secondary overflow scupper: 8" wide x 4" height (minimum size)	
WALKWAY SURFACE continuous walkway surface as shown on roof plan. 34-inch wide walkway.	
FALL PROTECTION ANCHOR fall protection anchor; welded to roof structural steel frame install flashing system at roofing penetration.	(FA)
FALL RESTRAINT ANCHOR STRAP fall restraint anchor straps mounted under ridge cap with exposed 12" ring both sides.	(FAS)

MATERIALS LEGEND

MATERIAL	PATTERN
STANDING SEAM METAL ROOFING (SSMR) refer to schedule for color and finish	
METAL DECK (MF-2) refer to schedule for color and finish	

ROOF PLAN NOTES

SYMBOL	NOTE
R01	ROOF ACCESS HATCH
R02	MECHANICAL ROOF TOP UNIT SCREENS. PROVIDE PREFORMED PVC ROOF BOOT AT SUPPORT COLUMNS.

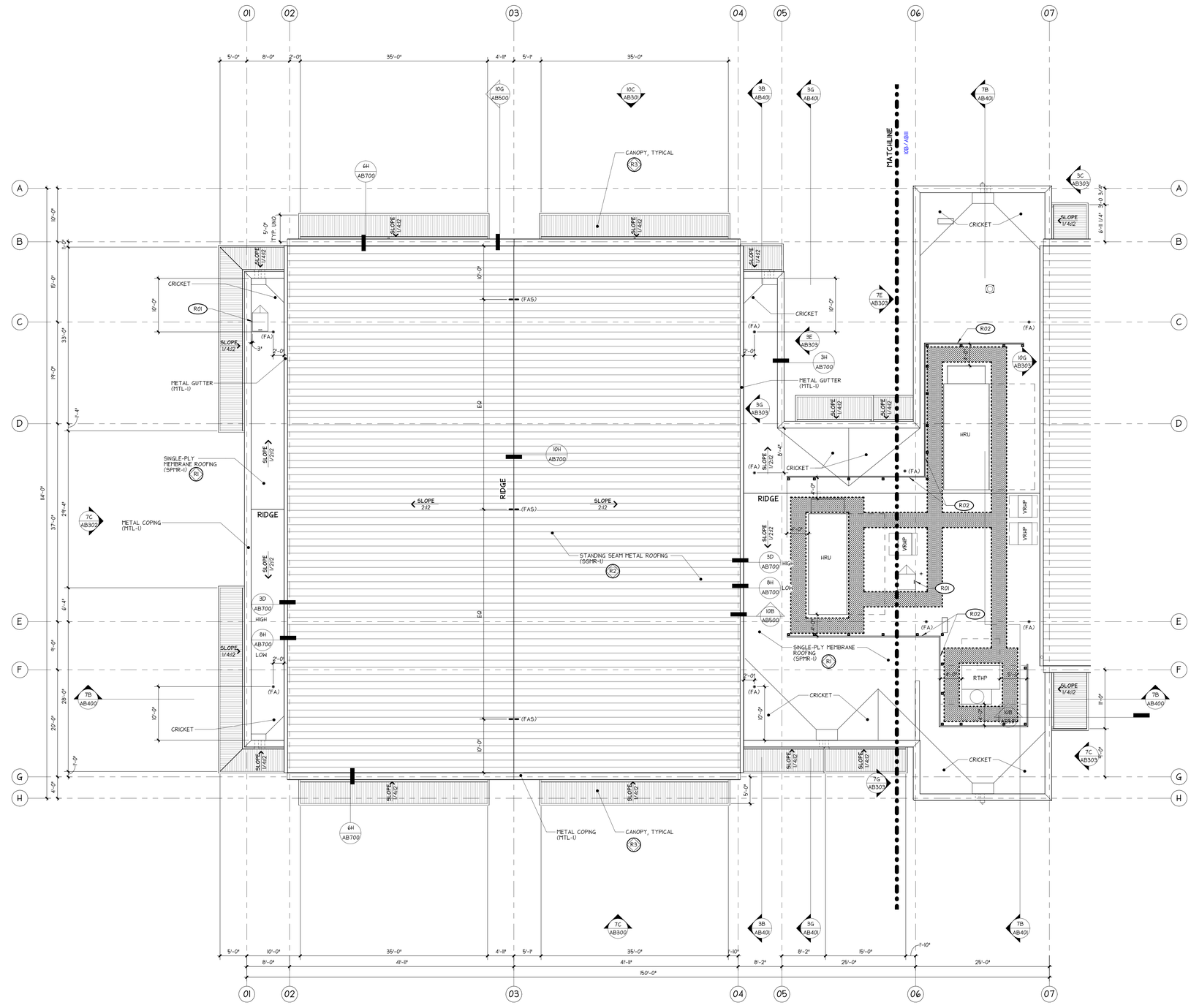

10B ROOF PLAN - SOUTH
1/8" = 1'-0"

NORTH
SCALE: 1/8" = 1'-0"

UNOFFICIAL COPY Official bid documents, plan holder's list, and addenda (if applicable) are available on BXWA.com

PLOTTED: 5/10/2024 3:30:02 PM PROJECT: a23-087 – CITY OF FEDERAL WAY
FILE PATH: C:\Shared\Revit\Local\2022\a23-087 Fed Way OPP - Bldg B_CENTRAL_r22_EBaskstrom.rvt

Helix design group

AMERICAN INSTITUTE OF ARCHITECTS

8934 REGISTERED ARCHITECT FLOWELL GATE STATE OF WASHINGTON

HELIX DESIGN GROUP, INC

ROOF PLAN

CITY OF FEDERAL WAY FLEET & SHOP BUILDING

FEDERAL WAY, WASHINGTON

REVISION	DATE

DATE	JOB NO.
05.06.24	a23-087

BID SET

AB110

DRAWING NO.

© HELIX DESIGN GROUP, INC.: All rights reserved. No part of this document may be reproduced in any form or by any means without permission in writing from Helix Design Group.

GENERAL NOTES

NOTE

1. REFER TO SHEET G020 FOR STANDARD ABBREVIATIONS LIST.
2. PROVIDE RAISED CURBS FOR ROOF MOUNTED HVAC UNITS AND ROOF ACCESS HVAC 18" MINIMUM HEIGHT.
3. MAINTAIN A MINIMUM OF 1/4:12 SLOPE AT ROOF CRICKETS.
4. SLOPE METAL GUTTERS TO DOWNSPOUT.
5. PAINT ALL HVAC UNITS WHERE SCREENS ARE NOT PROVIDED. COLOR: WHITE

ROOF PLAN LEGEND

DESCRIPTION	SYMBOL AND TEXT
ROOFING IDENTIFICATION material type	SINGLE-PLY MEMBRANE ROOFING
ROOF RIDGE ridge line	RIDGE
ROOF PLANE CHANGE description, change in sloped roof planes	VALLEY
ROOF CRICKET sloped (cricket) roof plane	
SLOPE IDENTIFICATION direction indicator, rise/run	SLOPE 1/2:12
ROOF ACCESS HATCH 36" x 36" (min 16 sq ft), cricket at upside of roof slope	
HVAC UNIT unit number, unit weight, unit dimensions, hvac unit on 12" ht built-up curb with flashing system	UNIT
PARAPET WALL parapet wall	
ROOF PARAPET THROUGH-WALL SCUPPERS 2" deep recessed level sump area, through-wall sheet metal scuppers and collector head	2'-0" 4'-0"
primary scupper: 8" wide x 4" height (minimum size)	
secondary overflow scupper: 8" wide x 4" height (minimum size)	
WALKWAY SURFACE continuous walkway surface as shown on roof plan. 34-inch wide walkway.	
FALL PROTECTION ANCHOR Fall protection anchor; welded to roof structural steel frame install flashing system at roofing penetration.	(FA)
FALL RESTRAINT ANCHOR STRAP Fall restraint anchor straps mounted under ridge cap with exposed 'D' ring both sides.	(FAS)

MATERIALS LEGEND

MATERIAL	PATTERN
STANDING SEAM METAL ROOFING (SSMR) refer to schedule for color and finish	
METAL DECK (MF-2) refer to schedule for color and finish	

ROOF PLAN NOTES

SYMBOL	NOTE
R01	ROOF ACCESS HATCH PER DETAIL
R02	MECHANICAL ROOF TOP UNIT SCREENS. PROVIDE PREFORMED PVC ROOF BOOT AT SUPPORT COLUMNS.
R03	EXTEND MEMBRANE FLASHING BOTH SIDES OF JOINT 12" UNDER METAL CAP FLASHING.

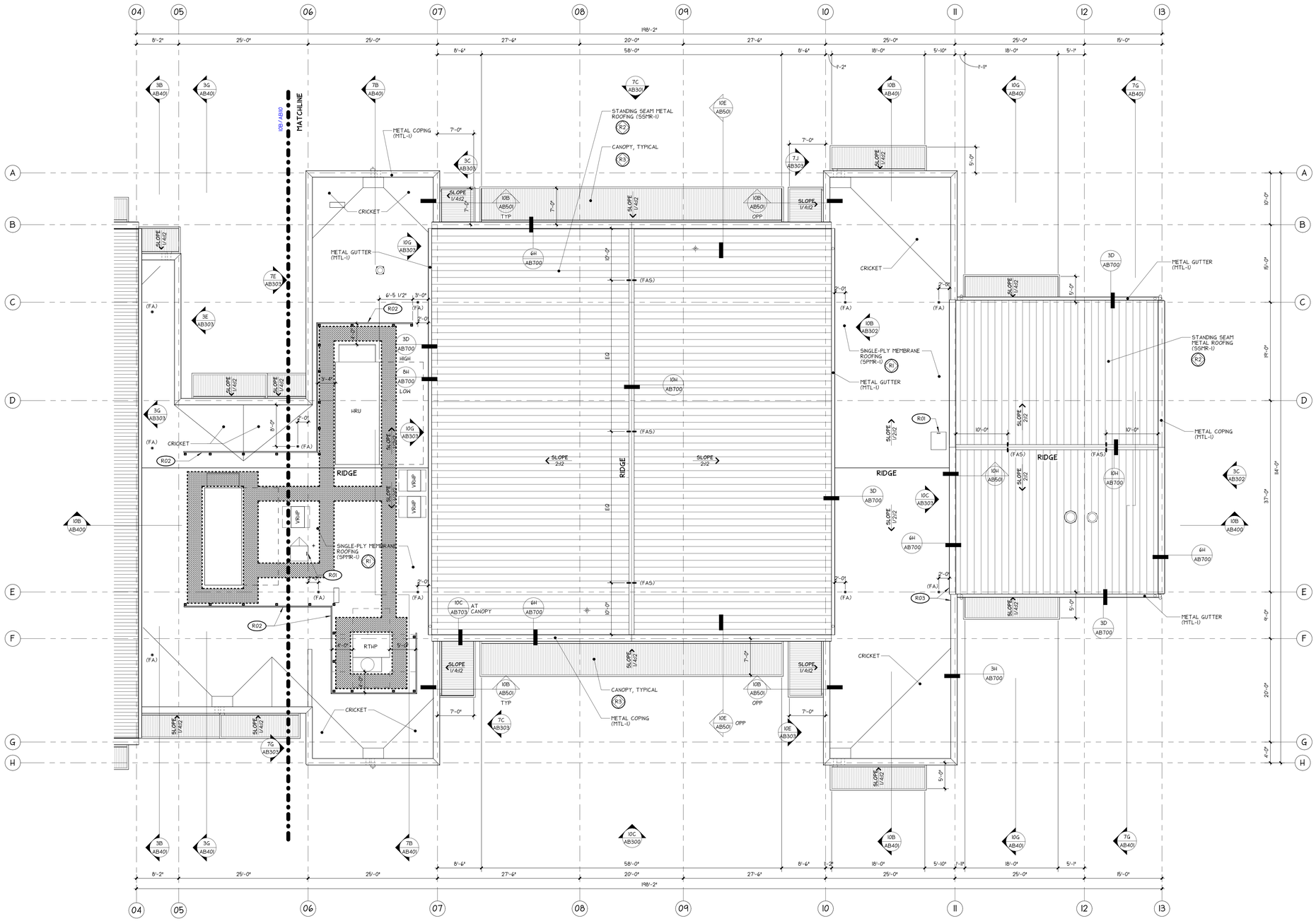

10B ROOF PLAN - NORTH
1/8" = 1'-0"

NORTH

SCALE: 1/8" = 1'-0"

UNOFFICIAL COPY Official bid documents, plan holder's list and addenda (if applicable) are available on BXWA.com

PLOTTED: 5/10/2024 3:30:13 PM PROJECT: a23-087 - CITY OF FEDERAL WAY
FILE PATH: C:\Users\Kevin.Lesli.2022\a23-087 Fed Way OFF - Bldg B-CENTRAL_r22.1Eba\arsrvm.rvt

Helix design group

AMERICAN INSTITUTE OF ARCHITECTS

6934 REGISTERED ARCHITECT FLOWELL GATE STATE OF WASHINGTON

HELIX DESIGN GROUP, INC

ROOF PLAN

CITY OF FEDERAL WAY FLEET & SHOP BUILDING

FEDERAL WAY, WASHINGTON

REVISION	DATE

DATE	JOB NO.
05.06.24	a23-087

BID SET

AB111

DRAWING NO.

© HELIX DESIGN GROUP, INC.: All rights reserved. No part of this document may be reproduced in any form or by any means without permission in writing from Helix Design Group.

GENERAL NOTES

NOTE

1. REFER TO SHEET G020 FOR STANDARD ABBREVIATIONS LIST.
2. REFER TO DETAIL ON SHEET AB720 FOR BRACING REQUIREMENTS OF SUSPENDED CEILINGS.

CEILING LEGEND

DESCRIPTION	SYMBOL AND TEXT
CEILING IDENTIFICATION	
room number material ceiling height	101 ACT-1 8'-0"
SOFFIT	
material description height	GWB SOFFIT 8'-0"
SUSPENDED ACOUSTICAL CEILING SYSTEM 2'x4' tiles, refer to plan for grid starting point, otherwise center layout in space	
GWB CEILINGS AND SOFFITS gwb at underside of metal ceiling joist framing assembly	
EXTERIOR SOFFIT BOARD esb at underside of metal ceiling joist framing assembly	
METAL CANOPY refer to ceiling plan for location	
FULL HEIGHT WALLS bearing walls extend to top of bearing elevation or height indicated on wall sections	
non-bearing partitions extend to underside of roof deck	
INTERIOR PARTITIONS interior (non-bearing) partitions extend 6 inches above ceilings and soffits	
FLUSH ACCESS PANEL refer to plan for size and locations	C
TOP OF WALL refer to plan for heights	T.O.W.

CEILING PLAN NOTES

SYMBOL	NOTE
C01	ROOF ACCESS HATCH ABOVE

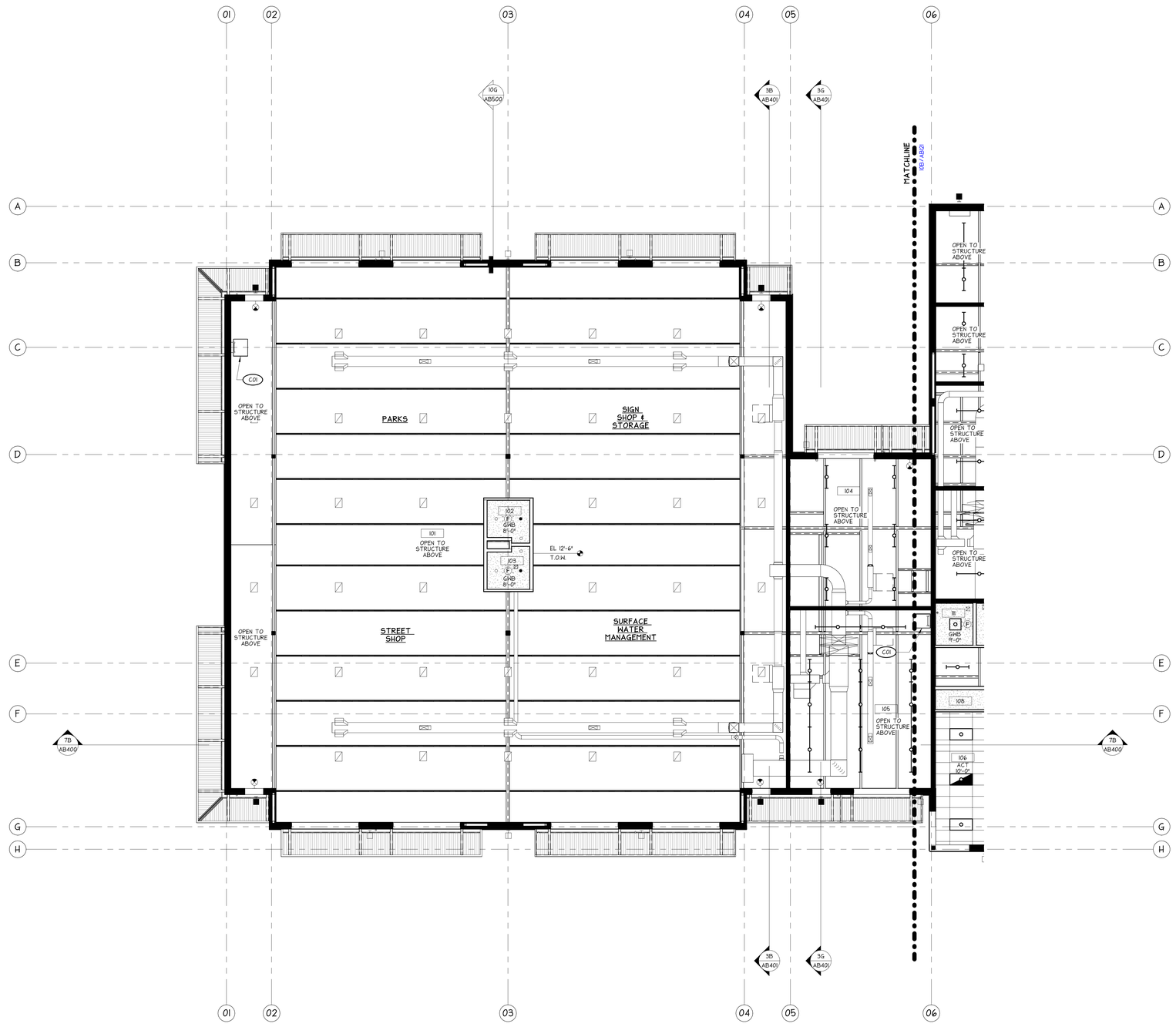

10B REFLECTED CEILING PLAN - SOUTH
1/8" = 1'-0"

NORTH

SCALE: 1/8" = 1'-0"

Helix design group

AMERICAN INSTITUTE OF ARCHITECTS

8934 REGISTERED ARCHITECT FLOWEL GATE STATE OF WASHINGTON

HELIX DESIGN GROUP, INC

REFLECTED CEILING PLAN

CITY OF FEDERAL WAY FLEET & SHOP BUILDING

FEDERAL WAY, WASHINGTON

REVISION	DATE

DATE	JOB NO.
05.06.24	a23-087

BID SET

AB120

DRAWING NO.

© HELIX DESIGN GROUP, INC.: All rights reserved. No part of this document may be reproduced in any form or by any means without permission in writing from Helix Design Group.

PLOTTED: 5/10/2024 3:30:04 PM PROJECT: a23-087 - CITY OF FEDERAL WAY
FILE PATH: C:\Shared\Revit_Local\2022\a23-087 Fed Way CPF - Bldg B_CENTRAL_r22_EBeckstrom.rvt

UNOFFICIAL COPY Official bid documents, plan holder's list, and addenda (if applicable) are available on BXWA.com

GENERAL NOTES

NOTE

1. REFER TO SHEET G020 FOR STANDARD ABBREVIATIONS LIST.
2. REFER TO DETAIL ON SHEET AB720 FOR BRACING REQUIREMENTS OF SUSPENDED CEILINGS.

CEILING LEGEND

DESCRIPTION	SYMBOL AND TEXT
CEILING IDENTIFICATION room number material ceiling height	101 ACT-1 8'-0"
SOFFIT material description height	GWB SOFFIT 8'-0"
SUSPENDED ACOUSTICAL CEILING SYSTEM 2x4' tiles, refer to plan for grid starting point, otherwise center layout in space	
GWB CEILINGS AND SOFFITS gwb at underside of metal ceiling joist framing assembly	
EXTERIOR SOFFIT BOARD esb at underside of metal ceiling joist framing assembly	
METAL CANOPY refer to ceiling plan for location	
FULL HEIGHT WALLS bearing walls extend to top of bearing elevation or height indicated on wall sections	
non-bearing partitions extend to underside of roof deck	
INTERIOR PARTITIONS interior (non-bearing) partitions extend 6 inches above ceilings and soffits	
FLUSH ACCESS PANEL refer to plan for size and locations	
TOP OF WALL refer to plan for heights	T.O.W.

CEILING PLAN NOTES

SYMBOL	NOTE
C01	ROOF ACCESS HATCH ABOVE.
C02	INTERIOR EXPOSED STEEL FRAMING PAINTED, (PT-4).

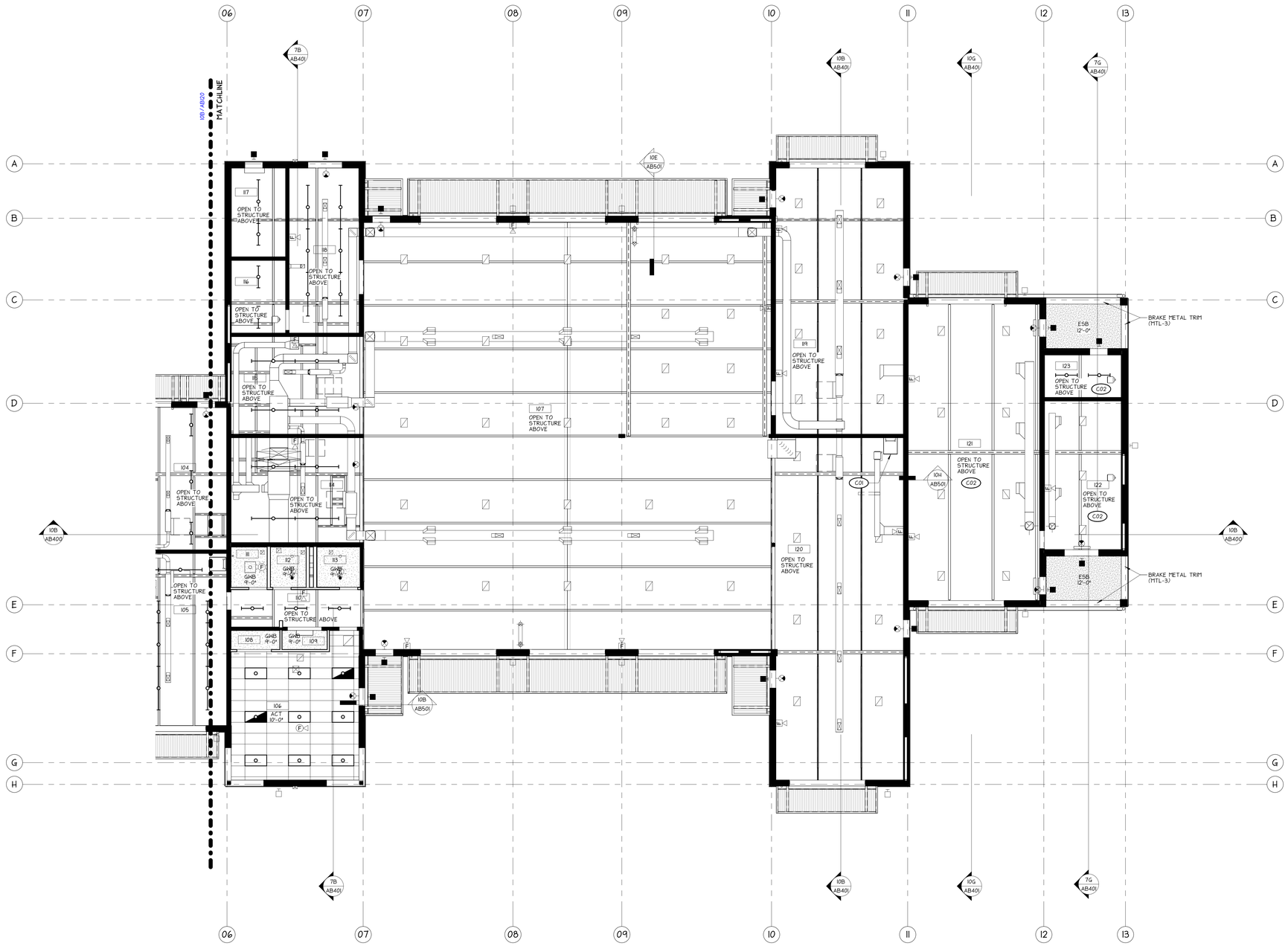

REFLECTED CEILING PLAN - NORTH

NORTH

SCALE: 1/8" = 1'-0"

*****UNOFFICIAL COPY***** Official bid documents, plan holder's list, addenda (if applicable) are available on BXWA.com

Helix design group

AMERICAN INSTITUTE OF ARCHITECTS

6934 REGISTERED ARCHITECT LOWELL CATE STATE OF WASHINGTON

HELIX DESIGN GROUP, INC

REFLECTED CEILING PLAN

CITY OF FEDERAL WAY FLEET & SHOP BUILDING

FEDERAL WAY, WASHINGTON

REVISION	DATE

DATE	JOB NO.
05.06.24	a23-087

BID SET

DRAWING NO.

AB121

© HELIX DESIGN GROUP, INC.: All rights reserved. No part of this document may be reproduced in any form or by any means without permission in writing from Helix Design Group.

PLOTTED: 5/31/2024 8:45:13 AM PROJECT: a23-087 - CITY OF FEDERAL WAY
FILE PATH: C:\Users\Kevin.Lusk.2022\a23-087 Fed Way OPP - Bldg B.CENTRAL_22_R_LUSKTM.rvt

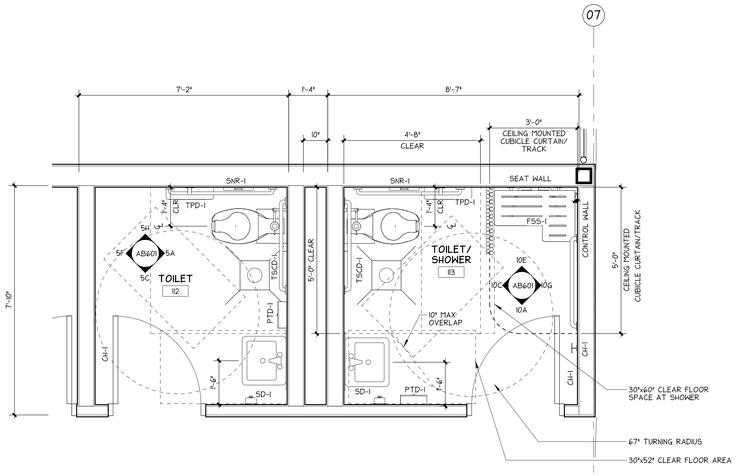

4G ENLARGED PLAN - TOILET 112 AND TOILET/SHOWER 113

1/2" = 1'-0"

NORTH

SCALE: 1/2" = 1'-0"

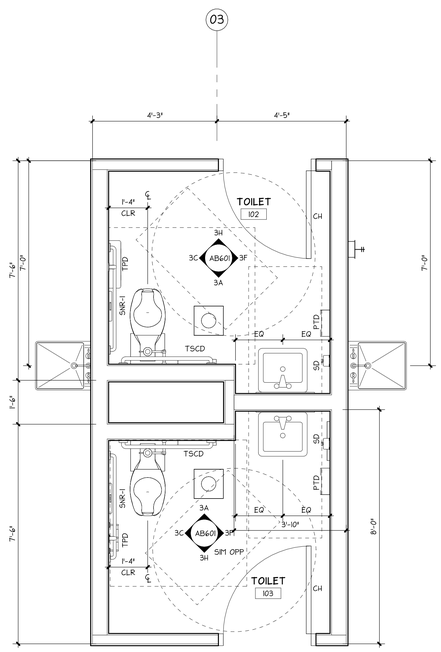

10D ENLARGED TOILET ROOM PLAN

1/2" = 1'-0"

NORTH

SCALE: 1/2" = 1'-0"

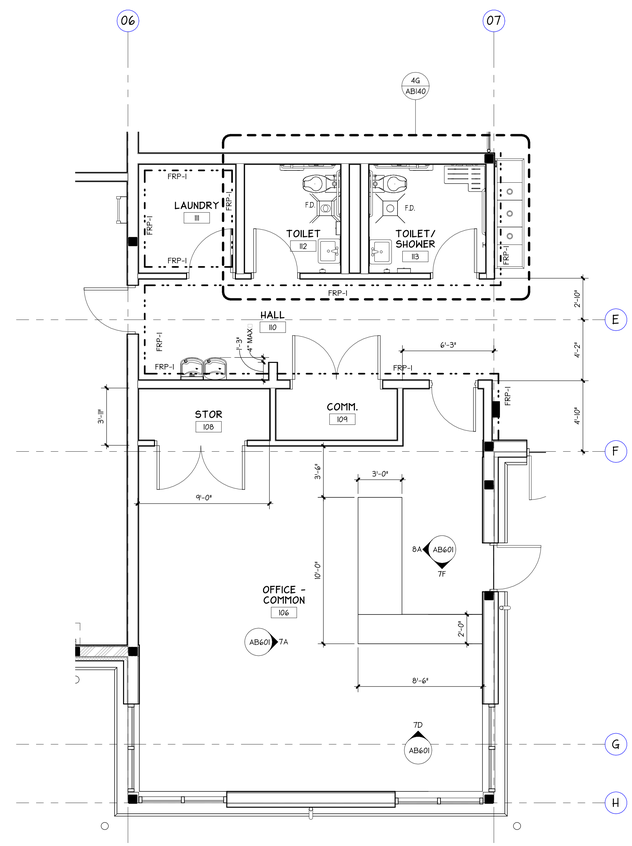

10G ENLARGED OFFICE AREA PLAN

1/4" = 1'-0"

NORTH

SCALE: 1/4" = 1'-0"

Helix design group

AMERICAN INSTITUTE OF ARCHITECTS

8934 REGISTERED ARCHITECT LOWELL GATE STATE OF WASHINGTON

HELIX DESIGN GROUP, INC

ENLARGED FLOOR PLANS

CITY OF FEDERAL WAY FLEET & SHOP BUILDING

FEDERAL WAY, WASHINGTON

REVISION	DATE

DATE	JOB NO.
05.06.24	a23-087

BID SET

AB140

DRAWING NO.

© HELIX DESIGN GROUP, INC.: All rights reserved. No part of this document may be reproduced in any form or by any means without permission in writing from Helix Design Group.

PLOTTED: 5/10/2024 3:30:16 PM PROJECT: a23-087 - CITY OF FEDERAL WAY
FILE PATH: G:\Shared\Revit_Local\2022\a23-087 Fed Way OPF - Bldg B_CENTRAL_22_EBeckstrom.rvt

UNOFFICIAL COPY Official bid documents, plan holder's list, and addenda (if applicable) are available on BXWA.com

DOOR SCHEDULE

NO	DOOR WIDTH	DOOR HEIGHT	DOOR TYPE	DOOR MATERIAL	DOOR FINISH	DOOR GLAZING	RATING	HARDWARE GROUP	FRAME MATERIAL	FRAME FINISH	FRAME TYPE	FRAME GLAZING	NOTES
101A	12'-0"	16'-0"	D5	STL	FF	-	-	-	STL	PT	-	-	[7]
101B	12'-0"	16'-0"	D5	STL	FF	-	-	-	STL	PT	-	-	[7]
101C	12'-0"	16'-0"	D5	STL	FF	-	-	-	STL	PT	-	-	[7]
101D	12'-0"	16'-0"	D5	STL	FF	-	-	-	STL	PT	-	-	[7]
101E	12'-0"	16'-0"	D5	STL	FF	-	-	-	STL	PT	-	-	[7]
101F	12'-0"	16'-0"	D5	STL	FF	-	-	-	STL	PT	-	-	[7]
101G	12'-0"	16'-0"	D5	STL	FF	-	-	-	STL	PT	-	-	[7]
101H	12'-0"	16'-0"	D5	STL	FF	-	-	-	STL	PT	-	-	[7]
101J	3'-0"	7'-0"	D4	HM	PT	SG	-	HDW-4A	HM	PT	F4	SG	
101K	3'-0"	7'-0"	D4	HM	PT	SG	-	HDW-4A	HM	PT	F4	SG	
101L	3'-0"	7'-0"	D4	HM	PT	SG	-	HDW-4A	HM	PT	F4	SG	
101M	3'-0"	7'-0"	D4	HM	PT	SG		HDW-4	HM	PT	F4	SG	
102	3'-0"	7'-0"	D1	HM	PT	-	-	HDW-19	HM	PT	F1	-	[3]
103	3'-0"	7'-0"	D1	HM	PT	-	-	HDW-19	HM	PT	F1	-	[3]
104A	10'-0"	12'-0"	D5	STL	FF	-	-	[7]	STL	PT	-	-	
104B	3'-0"	7'-0"	D1	HM	PT	-	-	HDW-4A	HM	PT	F1	-	
105A	10'-0"	12'-0"	D5	STL	FF	-	-	[7]	STL	PT	-	-	[7]
105B	3'-0"	7'-0"	D4	HM	PT	SG	-	HDW-4	HM	PT	F4	SG	
105C	3'-0"	7'-0"	D4	HM	PT	SG	-	HDW-15	HM	PT	F1	-	
105D	3'-0"	7'-0"	D4	HM	PT	SG	-	HDW-15	HM	PT	F1	-	
106A	3'-0"	7'-0"	D4	HM	PT	SG	-	HDW-2A	HM	PT	F4	SG	
106B	3'-0"	7'-0"	D1	HM	PT	-	-	HDW-15	HM	PT	F1	-	
106C	3'-0"	7'-0"	D1	HM	PT	-	-	HDW-18	HM	PT	F1	-	[1]
107A	14'-0"	16'-0"	D5	STL	FF	-	-	-	STL	PT	-	-	[7]
107B	14'-0"	16'-0"	D5	STL	FF	-	-	-	STL	PT	-	-	[7]
107C	14'-0"	16'-0"	D5	STL	FF	-	-	-	STL	PT	-	-	[7]
107D	14'-0"	16'-0"	D5	STL	FF	-	-	-	STL	PT	-	-	[7]
107E	14'-0"	16'-0"	D5	STL	FF	-	-	-	STL	PT	-	-	[7]
107F	14'-0"	16'-0"	D5	STL	FF	-	-	-	STL	PT	-	-	[7]
107G	3'-0"	7'-0"	D4	HM	PT	SG	-	HDW-4A	HM	PT	F4	SG	
107H	3'-0"	7'-0"	D4	HM	PT	SG	-	HDW-4A	HM	PT	F4	SG	
110	3'-0"	7'-0"	D1	HM	PT	-	-	HDW-18	HM	PT	F1	-	[1]
111	3'-0"	7'-0"	D1	HM	PT	-	-	HDW-15	HM	PT	F1	-	
112	3'-0"	7'-0"	D1	HM	PT	-	-	HDW-19	HM	PT	F1	-	[3]
113	3'-0"	7'-0"	D1	HM	PT	-	-	HDW-19	HM	PT	F1	-	[3]
114	3'-6"	7'-0"	D6	STL	FF	-	-	HDW-20	STL	FF	-	-	[8]
115	3'-6"	7'-0"	D6	STL	FF	-	-	HDW-20	STL	FF	-	-	[8]
116	3'-6"	7'-0"	D1	HM	PT	-	-	HDW-15	HM	PT	F1	-	
117	3'-0"	7'-0"	D1	HM	PT	-	-	HDW-4A	HM	PT	F1	-	
118A	3'-0"	7'-0"	D1	HM	PT	-	-	HDW-5	HM	PT	F1	-	[1]
118B	3'-0"	7'-0"	D1	HM	PT	-	-	HDW-17	HM	PT	F1	-	[1]
119A	14'-0"	16'-0"	D5	STL	FF	-	-	-	STL	PT	-	-	[7]
119B	3'-0"	7'-0"	D4	HM	PT	SG	-	HDW-4A	HM	PT	F4	SG	
119C	3'-0"	7'-0"	D4	HM	PT	SG	-	HDW-4A	HM	PT	F4	SG	
119D	3'-0"	7'-0"	D4	HM	PT	SG	-	HDW-17	HM	PT	F1	-	[1]
120A	14'-0"	16'-0"	D5	STL	FF	-	-	-	STL	PT	-	-	[7]
120B	3'-0"	7'-0"	D4	HM	PT	SG	-	HDW-4A	HM	PT	F4	SG	
120C	3'-0"	7'-0"	D4	HM	PT	SG	-	HDW-4A	HM	PT	F4	SG	
121A	14'-0"	16'-0"	D5	STL	FF	-	-	-	STL	PT	-	-	[7]
121B	14'-0"	16'-0"	D5	STL	FF	-	-	-	STL	PT	-	-	[7]
121C	3'-0"	7'-0"	D4	HM	PT	SG	-	HDW-4A	HM	PT	F1	-	
121D	3'-0"	7'-0"	D4	HM	PT	SG	-	HDW-4A	HM	PT	F1	-	
122A	3'-0"	7'-0"	D1	HM	PT	-	-	HDW-5	HM	PT	F1	-	[1]
122B	3'-0"	7'-0"	D1	HM	PT	-	-	HDW-4B	HM	PT	F1	-	
123	3'-0"	7'-0"	D1	HM	PT	-	-	HDW-4A	HM	PT	F1	-	

SCHEDULE NOTES

[1] PAIR OF DOORS.

[3] OCCUPANCY INDICATOR - THUMBTURN - "OCCUPIED"

[5] INSULATED H.M. DOOR

[7] INSULATED ROLLING SERVICE DOOR (RSD) : DOOR CONTROLS, HARDWARE, OPERATOR AND ACCESSORIES BY MANUFACTURER. REFER TO SPECIFICATION.

[8] WIRE PARTITION STORAGE ENCLOSURE SYSTEM.

GENERAL NOTES

1. REFER TO PROJECT MANUAL, SECTION 08 71 00, "DOOR HARDWARE" FOR HARDWARE GROUPS.
2. REFER TO COLORS AND MATERIALS SCHEDULE FOR COLORS AND FINISHES.
3. REFER TO PROJECT MANUAL, SECTION 08 81 00, "GLAZING" FOR GLAZING TYPES. INSULATING GLASS UNITS SHALL BE LABELED AND NFRC CERTIFIED.
4. REFER TO SHEET G020 FOR STANDARD ABBREVIATIONS LIST.
5. "PAINT" (PT) IS A GENERIC TERM USED IN DOCUMENTS. REFER TO PROJECT MANUAL, SECTION 09 91 00, "PAINTING" FOR SPECIFIC TYPE OF APPLIED FINISH. THE TERM "PAINT" REFERS TO PAINTS, STAINS, SEALERS AND OTHER APPLIED COATINGS.
6. REFER TO PROJECT MANUAL, SECTION 07 25 00, "WEATHER RESISTIVE BARRIER" FOR EXTERIOR WALL OPENING FLASHING REQUIREMENTS.
7. REFER TO BUILDING EXTERIOR OPENING PROTECTION LEGEND FOR FLASHING REQUIREMENTS OF EXTERIOR WALL OPENINGS.

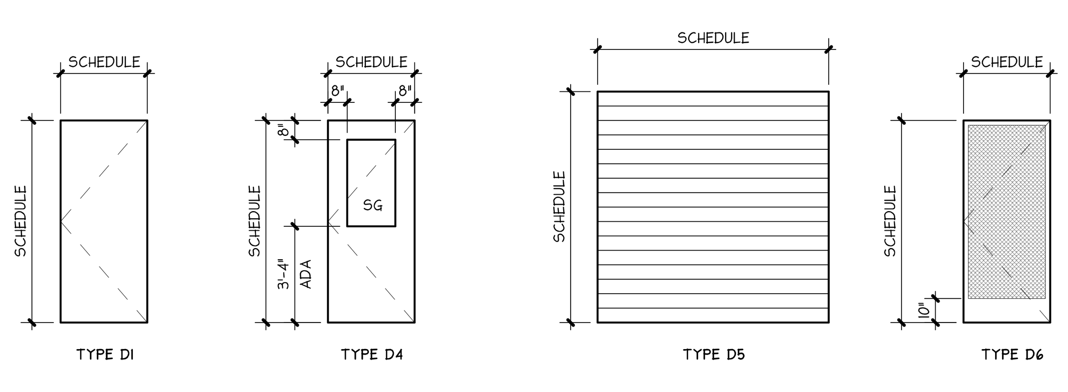

DOOR TYPES
1/4" = 1'-0"

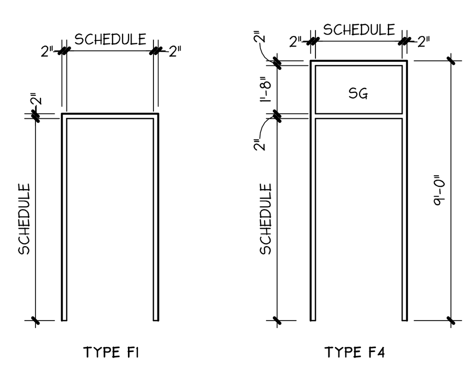

FRAME TYPES
1/4" = 1'-0"

ROOM FINISH SCHEDULE

NO	ROOM NAME	FLOOR MATERIAL	FLOOR FINISH	BASE	CEILING MATERIAL	CEILING FINISH	WALL MATERIAL	WALL FINISH	NOTES
FP-01									
101	DEPARTMENTAL SHOP	CONC	SLR	-	EXPOSED	PT	GWB	MDO[1]/PT/PT	
102	TOILET	CONC	RSNF	RSNF	GWB	PT	CBB	PT/FRP	
103	TOILET	CONC	RSNF	RSNF	GWB	PT	CBB	PT/FRP	
104	SNOW & ICE STORAGE	CONC	SLR	-	EXPOSED	PT	GWB	MDO[1]/PT/PT	
105	CARPENTRY SHOP	CONC	SLR	-	EXPOSED	PT	GWB	PT	
106	OFFICE - COMMON	CONC	SLR/WOM	RB	ACT	FF	GWB	PT	
107	FLEET MAINTENANCE BAYS	CONC	SLR	-	EXPOSED	PT	GWB	MDO[1]/PT/PT	
108	STOR	CONC	SLR	RB	EXPOSED	PT	GWB	PT	
109	COMM.	CONC	SLR	RB	EXPOSED	PT	GWB	PT	
110	HALL	CONC	SLR	RB	EXPOSED	PT	MRGWB	PT/FRP	
111	LAUNDRY	CONC	SLR	RB	GWB	PT	MRGWB	PT/FRP	
112	TOILET	CONC	RSNF	RSNF	GWB	PT	CBB	PT/FRP	
113	TOILET/ SHOWER	CONC	RSNF	TL	MRGWB	PT	CBB	TL[2]	
114	PARTS / STORAGE	CONC	SLR	RB	EXPOSED	PT	GWB	PT	
115	TOOL ROOM	CONC	SLR	RB	EXPOSED	PT	GWB	PT	
116	MECH	CONC	SLR	RB	EXPOSED	PT	GWB	PT	
117	ELEC	CONC	SLR	RB	EXPOSED	PT	GWB	PT	
118	COMPRESSOR & LUBE OIL	CONC	SLR	RB	EXPOSED	PT	GWB	MDO[1]/PT/PT	
119	FABRICATION & WELDING BAY	CONC	SLR	RB	EXPOSED	PT	GWB	MDO[1]/PT	
120	TIRE REPAIR & TIRE STORAGE BAY	CONC	SLR	RB	EXPOSED	PT	GWB	MDO[1]/PT	
121	WASH BAY	CONC	SLR	-	EXPOSED	PT	[4]	PVC	[3]
122	WASH BAY EQUIPMENT	CONC	SLR		EXPOSED	PT	GWB	MDO[1]PT/PT	
123	FIRE SPRINKLER	CONC	SLR	RB	EXPOSED	PT	GWB	PT	

SCHEDULE NOTES

[1] MDO PLYWOOD (4'X8' SHEETS HORIZONTAL INSTALLATION) FROM FLOOR TO 12'-0" HIGH ABOVE FINISHED FLOOR.

[2] FULL HEIGHT OF WALL.

[3] WEATHER BARRIER OVER EXTERIOR GYPSUM WALL BOARD ON ALL WALLS OF WASH BAY.

[4] EXTERIOR GYPSUM SHEATHING

GENERAL NOTES

1. REFER TO COLORS AND MATERIALS SCHEDULE FOR COLORS AND FINISHES.
2. "PAINT" (PT) IS A GENERIC TERM USED IN DOCUMENTS. REFER TO PROJECT MANUAL, SECTION 09 91 00, "PAINTING" FOR SPECIFIC TYPE OF APPLIED FINISH. THE TERM "PAINT" REFERS TO PAINTS, STAINS, SEALERS AND OTHER APPLIED COATINGS.
3. PAINT ALL EXPOSED CONDUITS AND PIPES; MATCH COLOR OF ADJACENT MATERIAL.
4. PAINT ALL EXPOSED SHEET METAL (GALVANIZED STEEL) HVAC DUCTS.
5. REFER TO COLORS AND MATERIALS SCHEDULE FOR PAINT COLOR.

STOREFRONT, WINDOW SYSTEM SCHEDULE

TYPE	FRAME SERIES	FRAME MATERIAL	FRAME FINISH	GLAZING	RATING	NOTES
SF1	[1]	ALUM	FF	GL-1	-	[4]
TW1	[2]	ALUM	FF	[3]	-	

SCHEDULE NOTES

[1] STOREFRONT SYSTEM (SF1): STOREFRONT SYSTEM. (THERMAL) FRAMING SYSTEM: CENTER HUNG. FRAME DIMENSIONS: 2" WIDE x 4-1/2" DEPTH.

[2] PREASSEMBLED TRANSLUCENT WINDOW SYSTEM (TW1)

[3] TRANSLUCENT POLYCARBONATE GLAZING BY MANUFACTURER

[4] REFER TO FLOOR PLAN AND EXTERIOR ELEVATIONS FOR SIZE AND LAYOUT OF WINDOWS.

GENERAL NOTES

1. FRAME DIMENSIONS REFER TO ROUGH OPENING SIZE.
2. REFER TO COLORS AND MATERIALS SCHEDULE FOR COLORS AND FINISHES.
3. REFER TO PROJECT MANUAL, SECTION 08 81 00, "GLAZING" FOR GLAZING TYPES. INSULATING GLASS UNITS SHALL BE LABELED AND NFRC CERTIFIED.
4. REFER TO SHEET G020 FOR STANDARD ABBREVIATIONS LIST.
5. REFER TO EXTERIOR ELEVATIONS FOR STOREFRONT SYSTEM TYPE.
7. REFER TO PROJECT MANUAL, SECTION 07 25 00, "WEATHER RESISTIVE BARRIER" FOR EXTERIOR WALL OPENING FLASHING REQUIREMENTS.
8. REFER TO BUILDING EXTERIOR OPENING PROTECTION LEGEND FOR FLASHING REQUIREMENTS OF EXTERIOR WALL OPENINGS.

LOUVER SCHEDULE

TYPE	FRAME HEIGHT	FRAME WIDTH	FRAME MATERIAL	FRAME FINISH	FRAME HEAD HEIGHT	RATING	NOTES
L1	1' - 8"	3' - 0"	ALUM	FF	[2]		

SCHEDULE NOTES

[1] LOUVERS: REFER TO COLORS AND MATERIALS SCHEDULE - SHEET AB040

[2] REFER TO EXTERIOR ELEVATIONS FOR DIMENSIONS.

GENERAL NOTES

1. FRAME DIMENSIONS REFER TO ROUGH OPENING SIZE.
2. REFER TO COLORS AND MATERIALS SCHEDULE FOR COLORS AND FINISHES.
3. "PAINT" (PT) IS A GENERIC TERM USED IN DOCUMENTS. REFER TO PROJECT MANUAL, SECTION 09 91 00, "PAINTING" FOR SPECIFIC TYPE OF APPLIED FINISH. THE TERM "PAINT" REFERS TO PAINTS, STAINS, SEALERS AND OTHER APPLIED COATING.
4. REFER TO EXTERIOR ELEVATIONS FOR LOUVER TYPE.
5. REFER TO PROJECT MANUAL, SECTION 07 25 00, "WEATHER RESISTIVE BARRIER" FOR EXTERIOR WALL OPENING FLASHING REQUIREMENTS.
6. REFER TO PROJECT MANUAL, SECTION 08 91 00, "LOUVERS" FOR WALL LOUVERS.
7. REFER TO BUILDING EXTERIOR OPENING PROTECTION LEGEND FOR FLASHING REQUIREMENTS OF EXTERIOR WALL OPENINGS.

UNOFFICIAL COPY Official bid documents, plan holder's list, and addenda (if applicable) are available on BXWA.com

PLOTTED: 5/10/2024 3:30:18 PM PROJECT: a23-087 - CITY OF FEDERAL WAY
FILE PATH: C:\Shive\Revit_Local_2022\a23-087 Fed Way OMF - Bldg B_CENTRAL_r22_EBackstrom.rvt

Helix design group

AMERICAN INSTITUTE OF ARCHITECTS

6934 REGISTERED ARCHITECT
LOWELL CATE
STATE OF WASHINGTON

HELIX DESIGN GROUP, INC

SCHEDULES

CITY OF FEDERAL WAY FLEET & SHOP BUILDING

FEDERAL WAY, WASHINGTON

REVISION	DATE

DATE 05.06.24 JOB NO. a23-087

BID SET

AB200

DRAWING NO.

© HELIX DESIGN GROUP, INC.: All rights reserved. No part of this document may be reproduced in any form or by any means without permission in writing from Helix Design Group.

GENERAL NOTES

NOTE

1. REFER TO BUILDING ASSEMBLY LEGEND ON SHEET AB030 FOR ASSEMBLY TYPES.
2. REFER TO SHEET G020 FOR STANDARD ABBREVIATIONS LIST.
3. PAINT ALL EXPOSED CONDUITS AND PIPES; MATCH COLOR OF ADJACENT MATERIAL.

ELEVATION LEGEND

DESCRIPTION	SYMBOL AND TEXT
STOREFRONT SYSTEM storefront type designation, refer to storefront schedule	SF1
TRANSLUCENT WINDOW SYSTEM translucent window type designation, refer to window schedule	TW
LOUVER louver type designation, refer to louver schedule	L1
ASSEMBLY TYPES W = wall type R = roof type S = soffit type F = floor type	W1
ELEVATION surface type designation T.O.F. = top of floor T.O.B. = top of bearing T.O.W. = top of wall (E) = existing	T.O.F.

ELEVATION NOTES

SYMBOL	NOTE
E01	HORIZONTAL PANEL JOINT REVEAL, TYPICAL.
E02	18" TALL ALUMINUM BUILDING ID SIGN.
E03	KNOX BOX.

MATERIALS LEGEND

MATERIAL	PATTERN
INSULATED METAL PANEL - HORIZONTAL (IMP-1) refer to schedule for color and finish	
INSULATED METAL PANEL - VERTICAL (IMP-2) refer to schedule for color and finish	
CONCRETE MASONRY UNIT (CMU) refer to schedule for finish, cmu pattern per elevations	
GLAZING refer to schedule for type and color SG = safety glass	

EXTERIOR FINISH SCHEDULE

ARCHITECTURAL CONCRETE (VERTICAL)	CLEAR SEALER
ARCHITECTURAL CONCRETE (HORIZONTAL)	CLEAR SEALER
CONCRETE MASONRY UNIT (CMU)	CLEAR SEALER
STRUCTURAL STEEL FRAMING (STL)	PAINT
INSULATED METAL PANEL (IMP)	FACTORY FINISH
STANDING SEAM METAL ROOFING (SSMR)	FACTORY FINISH
METAL DECK	PAINT
METAL FLASHING AND TRIM (MTL)	FACTORY FINISH
METAL GUTTERS AND DOWNSPOUTS (MTL)	FACTORY FINISH
STOREFRONT SYSTEM (SF)	FACTORY FINISH
TRANSLUCENT WINDOW SYSTEM (TW)	FACTORY FINISH
HOLLOW METAL DOORS AND FRAMES (HM)	PAINT
ROLLING SERVICE DOOR	FACTORY FINISH
LOUVERS (LVR)	FACTORY FINISH
BOLLARDS (STEEL)	PAINT
METAL FABRICATION (MF)	PAINT
MECHANICAL EQUIPMENT SCREEN (MES)	FACTORY FINISH

GENERAL NOTES:

1. REFER TO EXTERIOR COLORS AND MATERIALS SCHEDULE FOR COLORS AND FINISHES.
2. PAINT ALL EXPOSED CONDUITS AND PIPES; MATCH COLOR OF ADJACENT MATERIAL.
3. PAINT ALL EXPOSED MECHANICAL VENTS AND FLUES AT ROOF TO MATCH ROOF COLOR. PAINT TYPE: HIGH-TEMPERATURE RATED. FOR MINIMUM TEMPERATURE OF 300 DEGREE FAHRENHEIT.

UNOFFICIAL COPY Official bid documents, plan holder's list, and addenda (if applicable) are available on BXWA.com

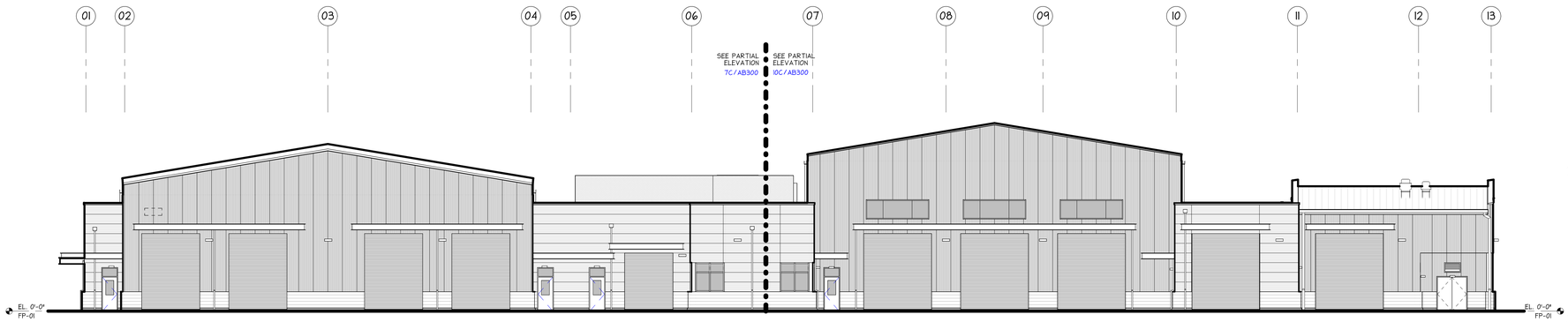

3C BUILDING ELEVATION EAST
3/32" = 1'-0"

SCALE: 3/32" = 1'-0"

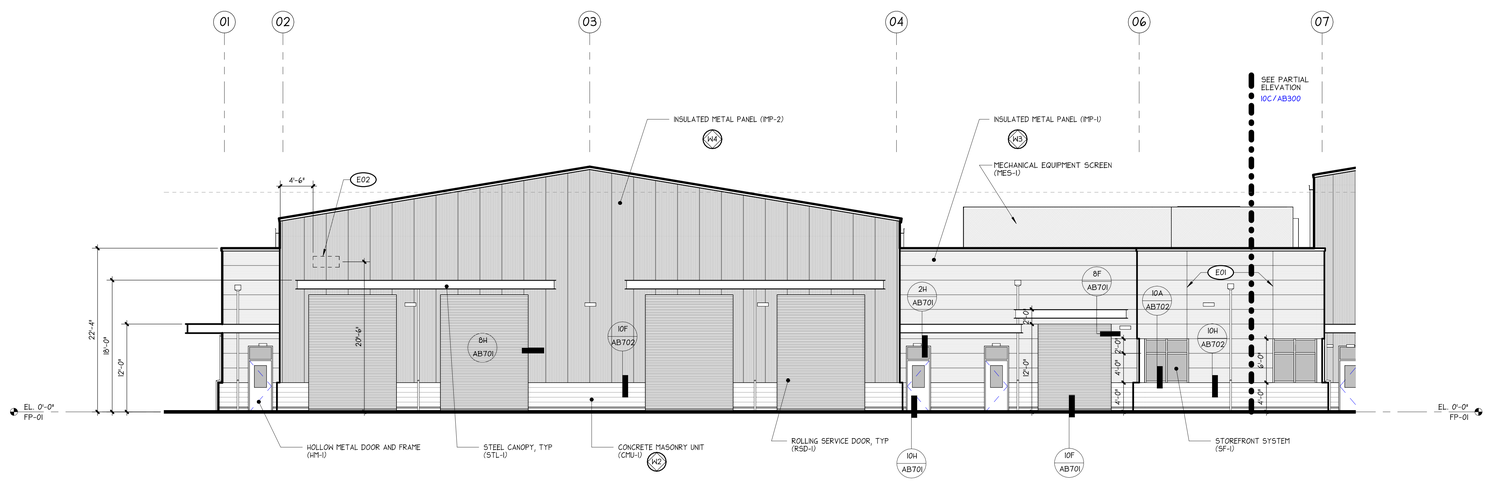

7C EAST ELEVATION - SOUTH
1/8" = 1'-0"

SCALE: 1/8" = 1'-0"

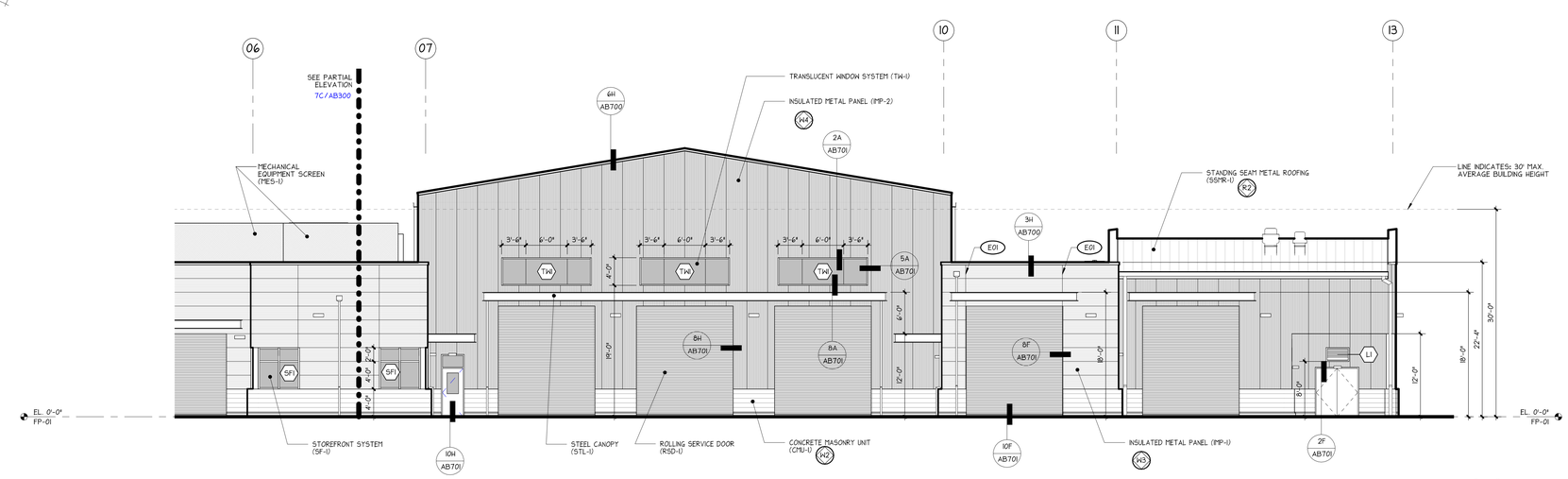

10C EAST ELEVATION - NORTH
1/8" = 1'-0"

SCALE: 1/8" = 1'-0"

Helix design group

AMERICAN INSTITUTE OF ARCHITECTS

6934 REGISTERED ARCHITECT FLOWEL CATE STATE OF WASHINGTON

HELIX DESIGN GROUP, INC

EXTERIOR ELEVATIONS

CITY OF FEDERAL WAY FLEET & SHOP BUILDING

FEDERAL WAY, WASHINGTON

REVISION	DATE

DATE	JOB NO.
05.06.24	a23-087

BID SET

AB300

DRAWING NO.

© HELIX DESIGN GROUP, INC.: All rights reserved. No part of this document may be reproduced in any form or by any means without permission in writing from Helix Design Group.

PLOTTED: 5/10/2024 3:30:21 PM PROJECT: a23-087 - CITY OF FEDERAL WAY
FILE PATH: C:\Users\Kevin.Lesli.2022\a23-087 Fed Way Off - Bldg B-CENTRAL_r22.1Ebaksirsmn.rvt

GENERAL NOTES

NOTE
1. REFER TO BUILDING ASSEMBLY LEGEND ON SHEET AB030 FOR ASSEMBLY TYPES.
2. REFER TO SHEET G020 FOR STANDARD ABBREVIATIONS LIST.
3. PAINT ALL EXPOSED CONDUITS AND PIPES; MATCH COLOR OF ADJACENT MATERIAL.

ELEVATION LEGEND

DESCRIPTION	SYMBOL AND TEXT
STOREFRONT SYSTEM storefront type designation, refer to storefront schedule	SF1
TRANSLUCENT WINDOW SYSTEM translucent window type designation, refer to window schedule	TW
LOUVER louver type designation, refer to louver schedule	L1
ASSEMBLY TYPES W = wall type; R = roof type; S = soffit type; F = floor type	W1
ELEVATION surface type designation; T.O.F. = top of floor; T.O.B. = top of bearing; T.O.W. = top of wall; (E) = existing	T.O.F.

ELEVATION NOTES

SYMBOL	NOTE
E01	HORIZONTAL PANEL JOINT REVEAL, TYPICAL.
E02	18" TALL ALUMINUM BUILDING ID SIGN.
E03	KNOX BOX.

MATERIALS LEGEND

MATERIAL	PATTERN
INSULATED METAL PANEL - HORIZONTAL (IMP-1) refer to schedule for color and finish	
INSULATED METAL PANEL - VERTICAL (IMP-2) refer to schedule for color and finish	
CONCRETE MASONRY UNIT (CMU) refer to schedule for finish, cmu pattern per elevations	
GLAZING refer to schedule for type and color; SG = safety glass	

EXTERIOR FINISH SCHEDULE

ARCHITECTURAL CONCRETE (VERTICAL)	CLEAR SEALER
ARCHITECTURAL CONCRETE (HORIZONTAL)	CLEAR SEALER
CONCRETE MASONRY UNIT (CMU)	CLEAR SEALER
STRUCTURAL STEEL FRAMING (STL)	PAINT
INSULATED METAL PANEL (IMP)	FACTORY FINISH
STANDING SEAM METAL ROOFING (SSMR)	FACTORY FINISH
METAL DECK	PAINT
METAL FLASHING AND TRIM (MTL)	FACTORY FINISH
METAL GUTTERS AND DOWNSPOUTS (MTL)	FACTORY FINISH
STOREFRONT SYSTEM (SF)	FACTORY FINISH
TRANSLUCENT WINDOW SYSTEM (TW)	FACTORY FINISH
HOLLOW METAL DOORS AND FRAMES (HM)	PAINT
ROLLING SERVICE DOOR	FACTORY FINISH
LOUVERS (LVR)	FACTORY FINISH
BOLLARDS (STEEL)	PAINT
METAL FABRICATION (MF)	PAINT
MECHANICAL EQUIPMENT SCREEN (MES)	FACTORY FINISH

GENERAL NOTES:

1. REFER TO EXTERIOR COLORS AND MATERIALS SCHEDULE FOR COLORS AND FINISHES.
2. PAINT ALL EXPOSED CONDUITS AND PIPES; MATCH COLOR OF ADJACENT MATERIAL.
3. PAINT ALL EXPOSED MECHANICAL VENTS AND FLUES AT ROOF TO MATCH ROOF COLOR. PAINT TYPE: HIGH-TEMPERATURE RATED. FOR MINIMUM TEMPERATURE OF 300 DEGREE FAHRENHEIT.

UNOFFICIAL COPY Official bid documents, plan holder's list, and addenda (if applicable) are available on BXWA.com

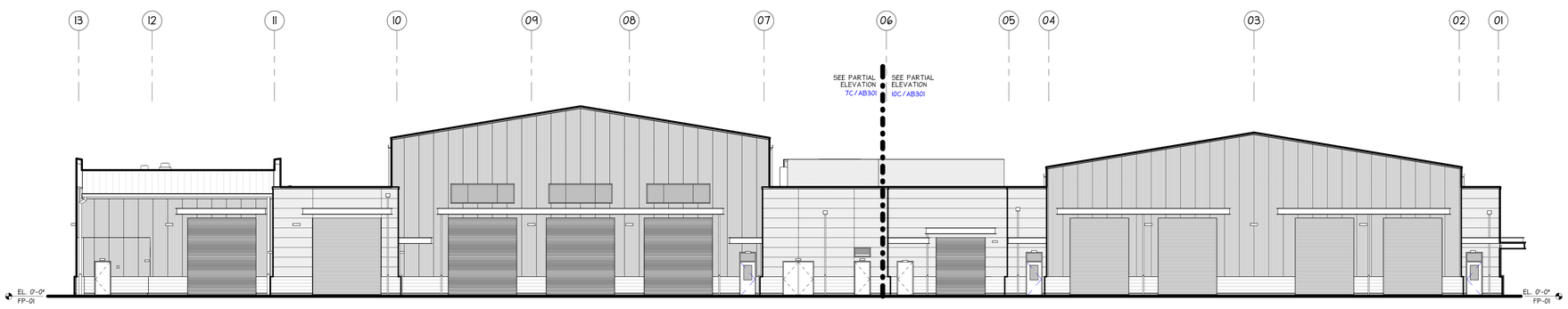

3C BUILDING ELEVATION WEST
3/32" = 1'-0"

SCALE: 3/32" = 1'-0"

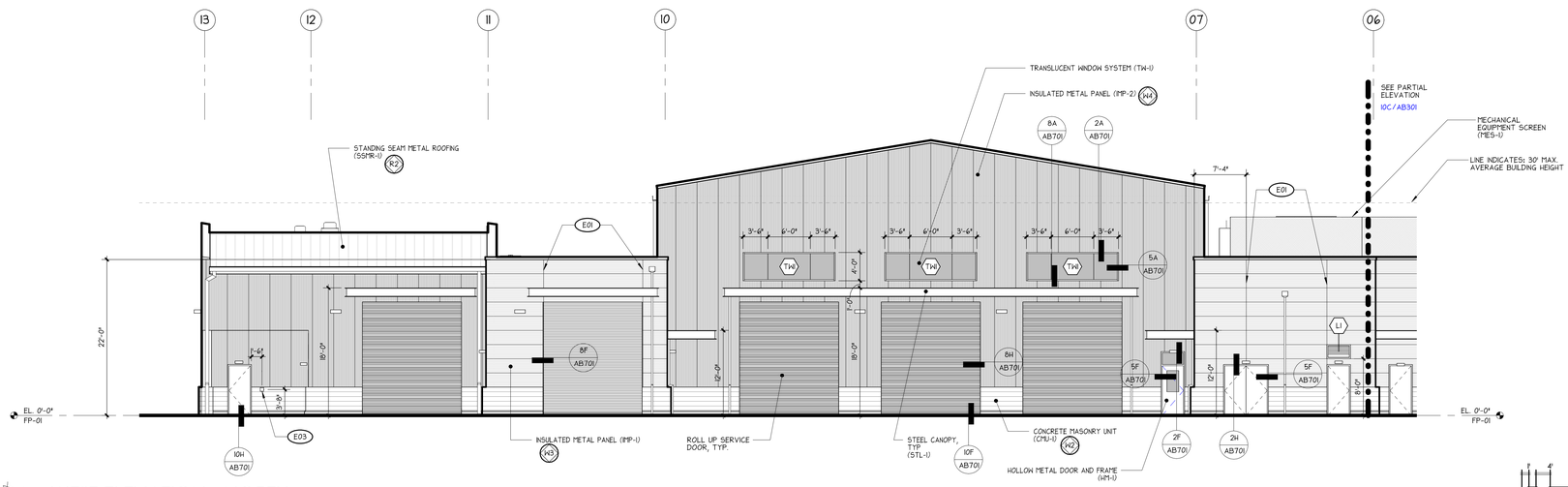

7C WEST ELEVATION - NORTH
1/8" = 1'-0"

SCALE: 1/8" = 1'-0"

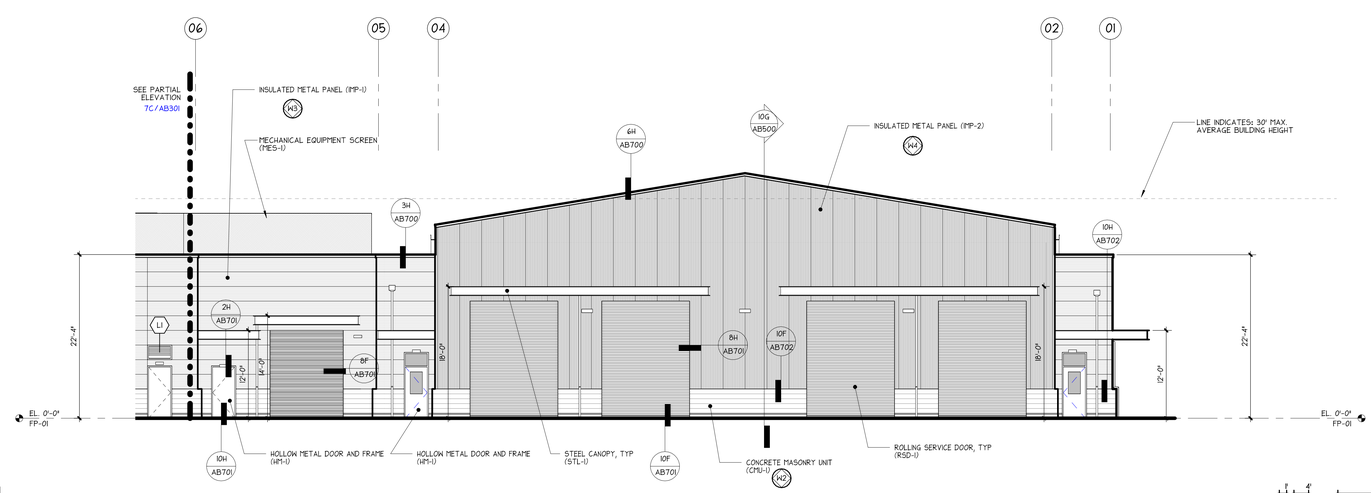

10C WEST ELEVATION - SOUTH
1/8" = 1'-0"

SCALE: 1/8" = 1'-0"

Helix design group

AMERICAN INSTITUTE OF ARCHITECTS

1994 REGISTERED ARCHITECT LOWELL CATE STATE OF WASHINGTON

HELIX DESIGN GROUP, INC

EXTERIOR ELEVATIONS

CITY OF FEDERAL WAY FLEET & SHOP BUILDING

FEDERAL WAY, WASHINGTON

REVISION	DATE

DATE	JOB NO.
05.06.24	a23-087

BID SET

DRAWING NO. AB301

© HELIX DESIGN GROUP, INC.: All rights reserved. No part of this document may be reproduced in any form or by any means without permission in writing from Helix Design Group.

PLOTTED: 5/10/2024 3:30:25 PM PROJECT: a23-087 - CITY OF FEDERAL WAY
FILE PATH: C:\SheetMove\Local\2022\a23-087 Fed Way OPF - Bldg B_CENTRAL_r22.EBeckstrom.rvt

GENERAL NOTES

NOTE
1. REFER TO BUILDING ASSEMBLY LEGEND ON SHEET AB030 FOR ASSEMBLY TYPES.
2. REFER TO SHEET G020 FOR STANDARD ABBREVIATIONS LIST.
3. PAINT ALL EXPOSED CONDUITS AND PIPES; MATCH COLOR OF ADJACENT MATERIAL.

ELEVATION LEGEND

DESCRIPTION	SYMBOL AND TEXT
STOREFRONT SYSTEM storefront type designation, refer to storefront schedule	SF1
TRANSLUCENT WINDOW SYSTEM translucent window type designation, refer to window schedule	TW
LOUVER louver type designation, refer to louver schedule	L1
ASSEMBLY TYPES W = wall type; R = roof type; S = soffit type; F = floor type	W1
ELEVATION surface type designation; T.O.F. = top of floor; T.O.B. = top of bearing; T.O.W. = top of wall; (E) = existing	T.O.F.

ELEVATION NOTES

SYMBOL	NOTE
E01	HORIZONTAL PANEL JOINT REVEAL, TYPICAL.
E02	18" TALL ALUMINUM BUILDING ID SIGN.
E03	KNOX BOX.

MATERIALS LEGEND

MATERIAL	PATTERN
INSULATED METAL PANEL - HORIZONTAL (IMP-1) refer to schedule for color and finish	
INSULATED METAL PANEL - VERTICAL (IMP-2) refer to schedule for color and finish	
CONCRETE MASONRY UNIT (CMU) refer to schedule for finish, cmu pattern per elevations	
GLAZING refer to schedule for type and color; SG = safety glass	

EXTERIOR FINISH SCHEDULE

ARCHITECTURAL CONCRETE (VERTICAL)	CLEAR SEALER
ARCHITECTURAL CONCRETE (HORIZONTAL)	CLEAR SEALER
CONCRETE MASONRY UNIT (CMU)	CLEAR SEALER
STRUCTURAL STEEL FRAMING (STL)	PAINT
INSULATED METAL PANEL (IMP)	FACTORY FINISH
STANDING SEAM METAL ROOFING (SSMR)	FACTORY FINISH
METAL DECK	PAINT
METAL FLASHING AND TRIM (MTL)	FACTORY FINISH
METAL GUTTERS AND DOWNSPOUTS (MTL)	FACTORY FINISH
STOREFRONT SYSTEM (SF)	FACTORY FINISH
TRANSLUCENT WINDOW SYSTEM (TW)	FACTORY FINISH
HOLLOW METAL DOORS AND FRAMES (HM)	PAINT
ROLLING SERVICE DOOR	FACTORY FINISH
LOUVERS (LVR)	FACTORY FINISH
BOLLARDS (STEEL)	PAINT
METAL FABRICATION (MF)	PAINT
MECHANICAL EQUIPMENT SCREEN (MES)	FACTORY FINISH

GENERAL NOTES:

1. REFER TO EXTERIOR COLORS AND MATERIALS SCHEDULE FOR COLORS AND FINISHES.
2. PAINT ALL EXPOSED CONDUITS AND PIPES; MATCH COLOR OF ADJACENT MATERIAL.
3. PAINT ALL EXPOSED MECHANICAL VENTS AND FLUES AT ROOF TO MATCH ROOF COLOR. PAINT TYPE: HIGH-TEMPERATURE RATED. FOR MINIMUM TEMPERATURE OF 300 DEGREE FAHRENHEIT.

UNOFFICIAL COPY Official bid documents, plan holder's list, and addenda (if applicable) are available on BXWA.com

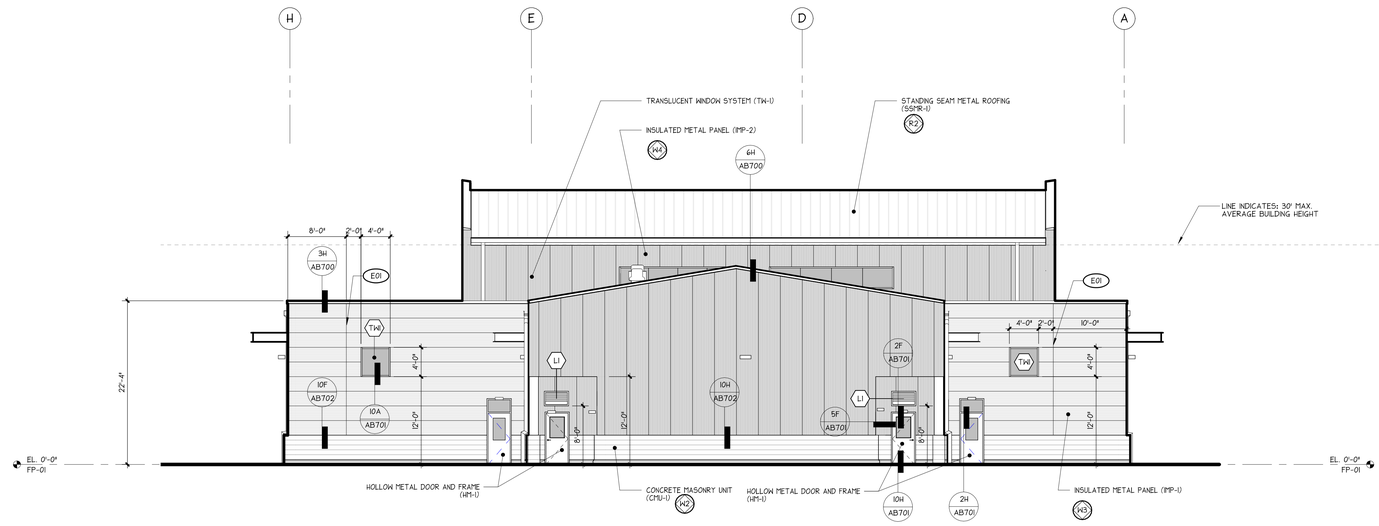

3C NORTH ELEVATION
1/8" = 1'-0"

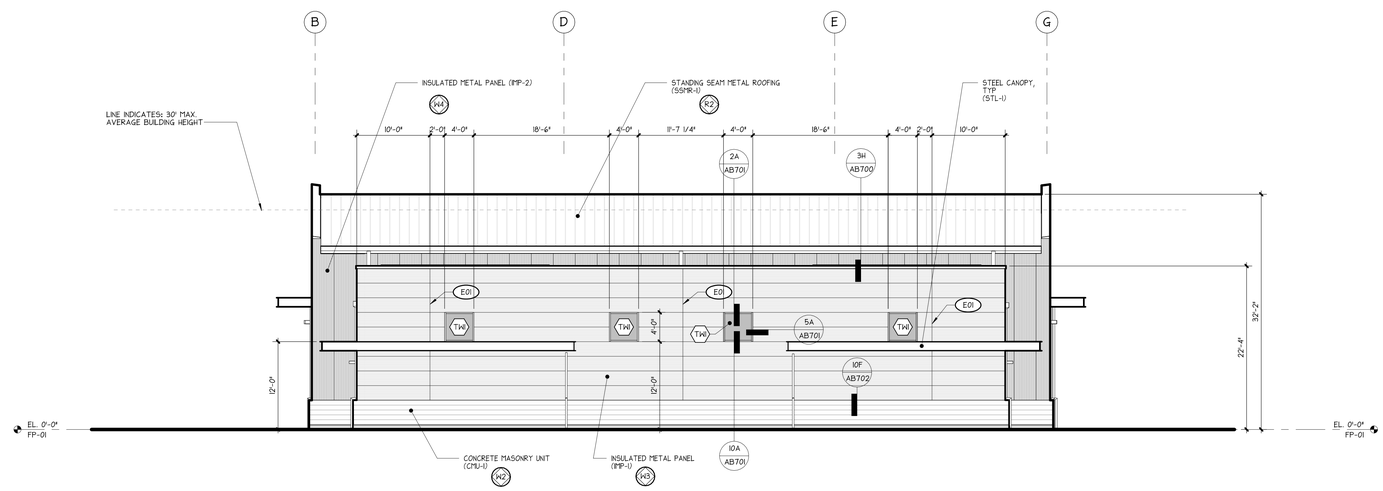

7C SOUTH ELEVATION
1/8" = 1'-0"

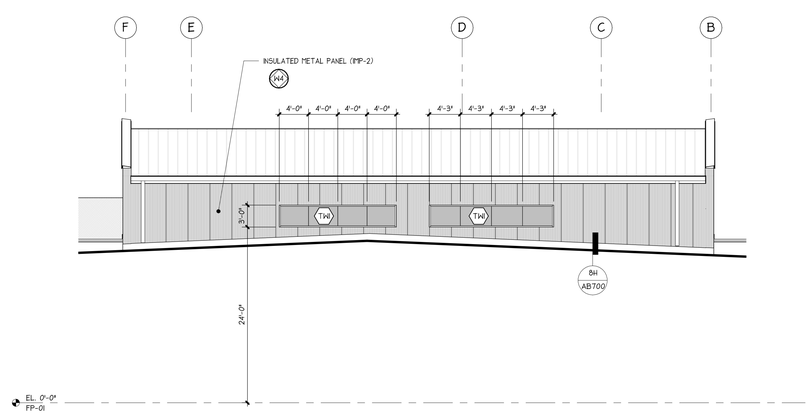

10B PARTIAL EXTERIOR ELEVATION
1/8" = 1'-0"

SCALE: 1/8" = 1'-0"

Helix design group

AMERICAN INSTITUTE OF ARCHITECTS

8934 REGISTERED ARCHITECT FLOWELL GATE STATE OF WASHINGTON

HELIX DESIGN GROUP, INC

EXTERIOR ELEVATIONS

CITY OF FEDERAL WAY FLEET & SHOP BUILDING

FEDERAL WAY, WASHINGTON

REVISION	DATE

DATE	JOB NO.
05.06.24	a23-087

BID SET

DRAWING NO.
AB302

© HELIX DESIGN GROUP, INC.: All rights reserved. No part of this document may be reproduced in any form or by any means without permission in writing from Helix Design Group.

PLOTTED: 5/10/2024 3:30:26 PM PROJECT: a23-087 - CITY OF FEDERAL WAY
FILE PATH: G:\Shared\Revit_Local\2022\a23-087 Fed Way OPF - Bldg B_CENTRAL_r22.1Backstrom.rvt

GENERAL NOTES

NOTE
1. REFER TO BUILDING ASSEMBLY LEGEND ON SHEET AB030 FOR ASSEMBLY TYPES.
2. REFER TO SHEET G020 FOR STANDARD ABBREVIATIONS LIST.
3. PAINT ALL EXPOSED CONDUITS AND PIPES; MATCH COLOR OF ADJACENT MATERIAL.

ELEVATION LEGEND

DESCRIPTION	SYMBOL AND TEXT
STOREFRONT SYSTEM storefront type designation, refer to storefront schedule	SF1
TRANSLUCENT WINDOW SYSTEM translucent window type designation, refer to window schedule	TW
LOUVER louver type designation, refer to louver schedule	L1
ASSEMBLY TYPES W = wall type R = roof type S = soffit type F = floor type	W1
ELEVATION surface type designation T.O.F. = top of floor T.O.B. = top of bearing T.O.W. = top of wall (E) = existing	T.O.F.

ELEVATION NOTES

SYMBOL	NOTE
E01	HORIZONTAL PANEL JOINT REVEAL, TYPICAL.
E02	18" TALL ALUMINUM BUILDING ID SIGN.
E03	KNOX BOX.

MATERIALS LEGEND

MATERIAL	PATTERN
INSULATED METAL PANEL - HORIZONTAL (IMP-1) refer to schedule for color and finish	
INSULATED METAL PANEL - VERTICAL (IMP-2) refer to schedule for color and finish	
CONCRETE MASONRY UNIT (CMU) refer to schedule for finish, cmu pattern per elevations	
GLAZING refer to schedule for type and color SG = safety glass	

EXTERIOR FINISH SCHEDULE

ARCHITECTURAL CONCRETE (VERTICAL)	CLEAR SEALER
ARCHITECTURAL CONCRETE (HORIZONTAL)	CLEAR SEALER
CONCRETE MASONRY UNIT (CMU)	CLEAR SEALER
STRUCTURAL STEEL FRAMING (STL)	PAINT
INSULATED METAL PANEL (IMP)	FACTORY FINISH
STANDING SEAM METAL ROOFING (SSMR)	FACTORY FINISH
METAL DECK	PAINT
METAL FLASHING AND TRIM (MTL)	FACTORY FINISH
METAL GUTTERS AND DOWNSPOUTS (MTL)	FACTORY FINISH
STOREFRONT SYSTEM (SF)	FACTORY FINISH
TRANSLUCENT WINDOW SYSTEM (TW)	FACTORY FINISH
HOLLOW METAL DOORS AND FRAMES (HM)	PAINT
ROLLING SERVICE DOOR	FACTORY FINISH
LOUVERS (LVR)	FACTORY FINISH
BOLLARDS (STEEL)	PAINT
METAL FABRICATION (MF)	PAINT
MECHANICAL EQUIPMENT SCREEN (MES)	FACTORY FINISH

GENERAL NOTES:

1. REFER TO EXTERIOR COLORS AND MATERIALS SCHEDULE FOR COLORS AND FINISHES.
2. PAINT ALL EXPOSED CONDUITS AND PIPES; MATCH COLOR OF ADJACENT MATERIAL.
3. PAINT ALL EXPOSED MECHANICAL VENTS AND FLUES AT ROOF TO MATCH ROOF COLOR. PAINT TYPE: HIGH-TEMPERATURE RATED. FOR MINIMUM TEMPERATURE OF 300 DEGREE FAHRENHEIT.

UNOFFICIAL COPY Official bid documents, plan holder's list, and addenda (if applicable) are available on BXWA.com

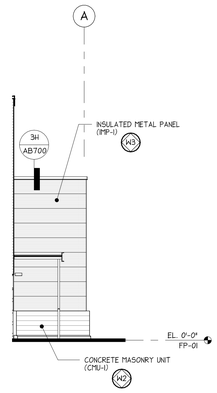

3C PARTIAL EXTERIOR ELEVATION
1/8" = 1'-0"

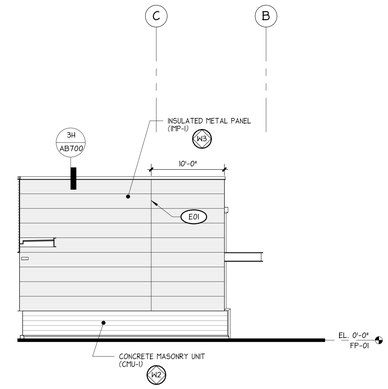

3E PARTIAL EXTERIOR ELEVATION
1/8" = 1'-0"

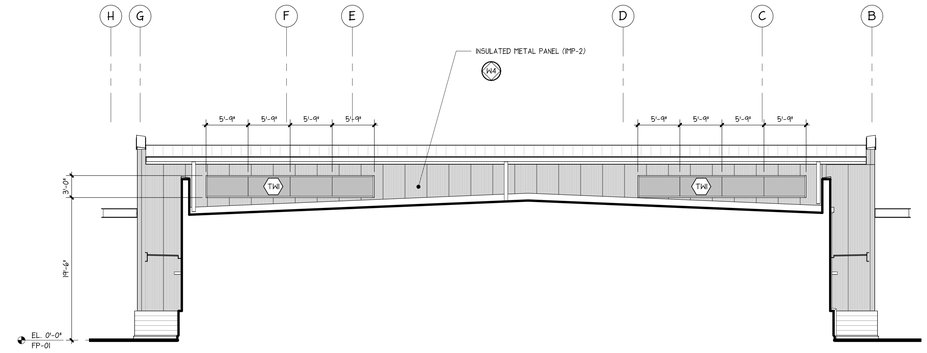

3G PARTIAL EXTERIOR ELEVATION
1/8" = 1'-0"

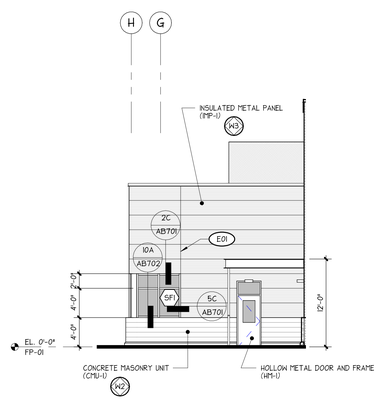

7C PARTIAL EXTERIOR ELEVATION
1/8" = 1'-0"

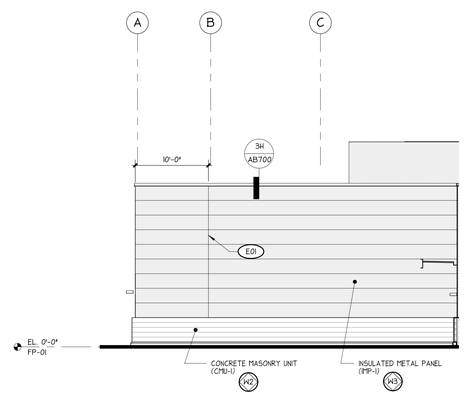

7E PARTIAL EXTERIOR ELEVATION
1/8" = 1'-0"

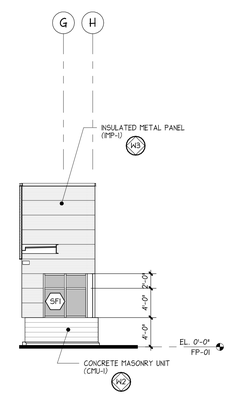

7G PARTIAL EXTERIOR ELEVATION
1/8" = 1'-0"

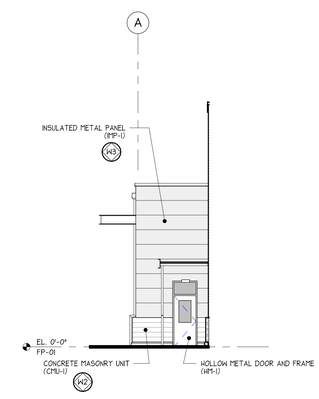

7J PARTIAL EXTERIOR ELEVATION
1/8" = 1'-0"

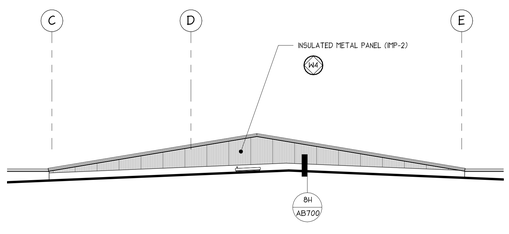

10C PARTIAL EXTERIOR ELEVATION
1/8" = 1'-0"

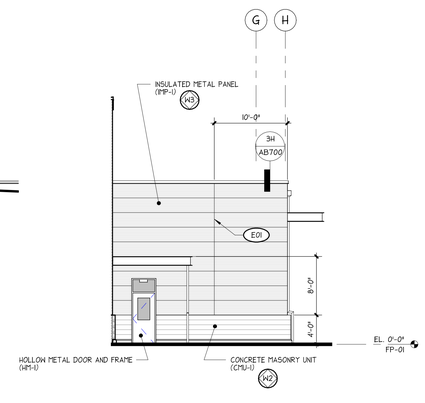

10E PARTIAL EXTERIOR ELEVATION
1/8" = 1'-0"

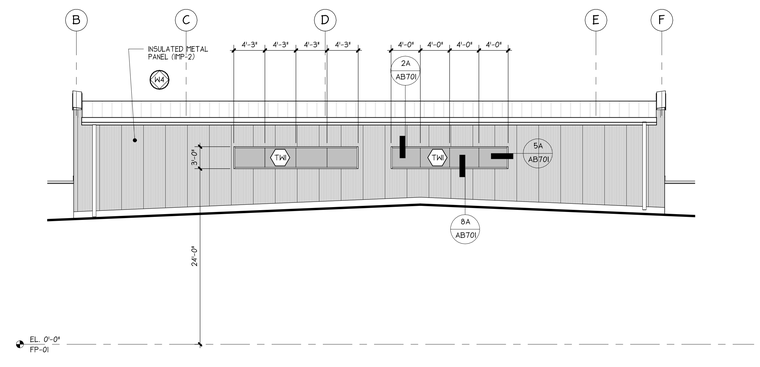

10G PARTIAL EXTERIOR ELEVATION
1/8" = 1'-0"

Helix design group

AMERICAN INSTITUTE OF ARCHITECTS

8934 REGISTERED ARCHITECT FLOWELL GATE STATE OF WASHINGTON

HELIX DESIGN GROUP, INC

EXTERIOR ELEVATIONS

CITY OF FEDERAL WAY FLEET & SHOP BUILDING

FEDERAL WAY, WASHINGTON

REVISION	DATE

DATE	JOB NO.
05.06.24	a23-087

BID SET

AB303

DRAWING NO.

© HELIX DESIGN GROUP, INC.: All rights reserved. No part of this document may be reproduced in any form or by any means without permission in writing from Helix Design Group.

PLOTTED: 5/01/2024 3:30:27 PM PROJECT: a23-087 - CITY OF FEDERAL WAY
FILE PATH: C:\Users\Kent.Lind\2022\a23-087 Fed Way Off - Bldg B_CENTRAL_r22.EBackstream.rvt

SECTION LEGEND

DESCRIPTION	SYMBOL AND TEXT
ASSEMBLY TYPES M = wall type R = roof type S = soffit type F = floor type	(M#)
ELEVATION surface type designation T.O.F. = top of floor T.O.B. = top of bearing T.O.W. = top of wall	T.O.F.

GENERAL NOTES

NOTE
1. REFER TO BUILDING ASSEMBLY LEGEND FOR ASSEMBLY TYPES.
2. REFER TO SHEET G020 FOR STANDARD ABBREVIATIONS LIST.

SECTION NOTES

SYMBOL	NOTE
(B50)	MECHANICAL ROOF TOP UNIT
(B502)	MECHANICAL EQUIPMENT SCREEN (MES), REFER TO ~/~~

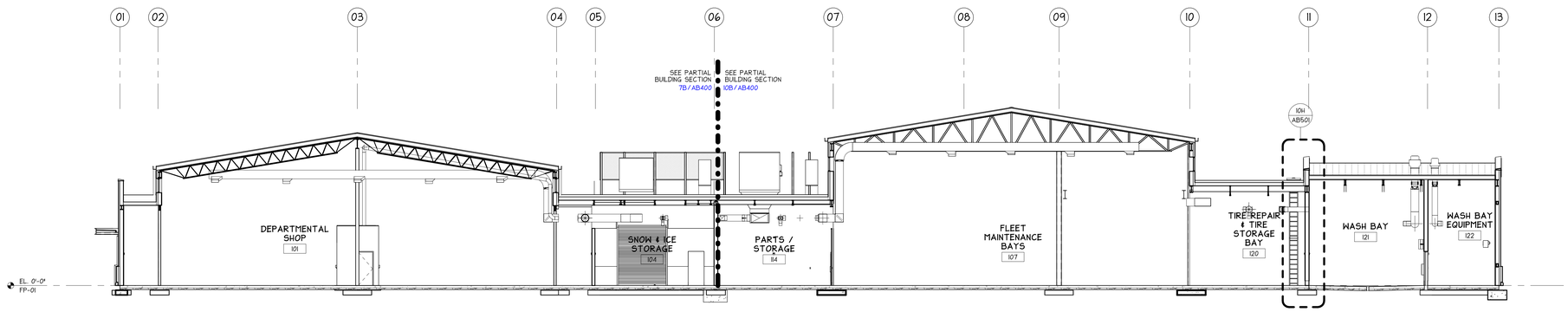

3B OVERALL BUILDING SECTION
3/32" = 1'-0"

SCALE: 3/32" = 1'-0"

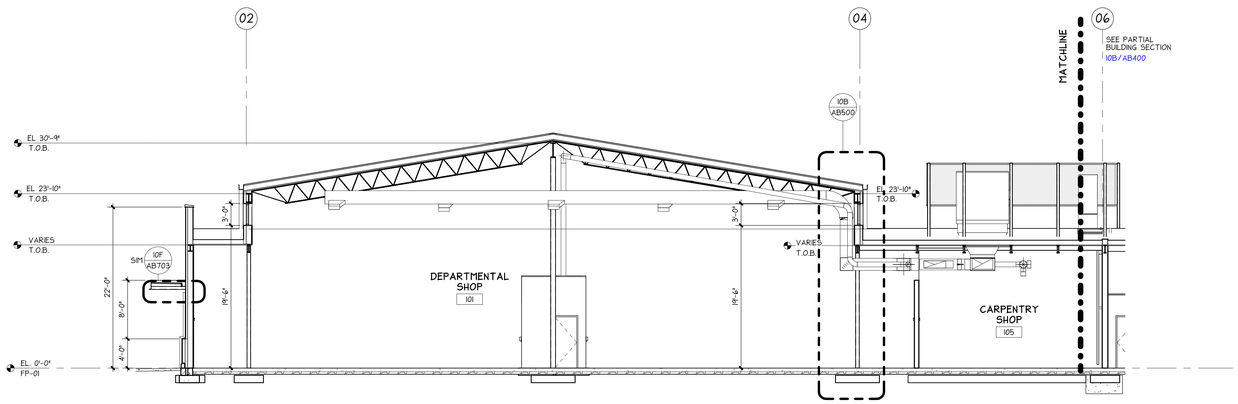

7B PARTIAL BUILDING SECTION - SOUTH
1/8" = 1'-0"

SCALE: 1/8" = 1'-0"

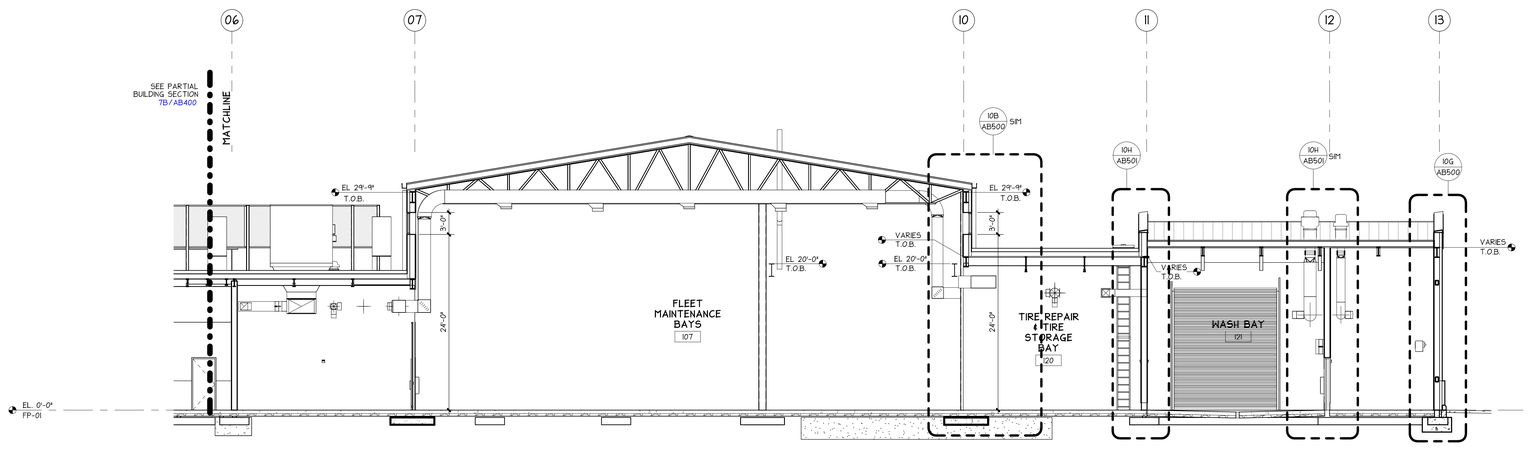

10B PARTIAL BUILDING SECTION - NORTH
1/8" = 1'-0"

SCALE: 1/8" = 1'-0"

Helix design group

AMERICAN INSTITUTE OF ARCHITECTS

1934 REGISTERED ARCHITECT FLOWEL GATE STATE OF WASHINGTON

HELIX DESIGN GROUP, INC

BUILDING SECTIONS

CITY OF FEDERAL WAY FLEET & SHOP BUILDING

FEDERAL WAY, WASHINGTON

REVISION	DATE

DATE	JOB NO.
05.06.24	a23-087

BID SET

AB400

DRAWING NO.

© HELIX DESIGN GROUP, INC.: All rights reserved. No part of this document may be reproduced in any form or by any means without permission in writing from Helix Design Group.

PLOTTED: 5/10/2024 3:30:29 PM PROJECT: a23-087 - CITY OF FEDERAL WAY
FILE PATH: C:\Users\Kevin.Lesli...2022\a23-087 Fed Way Off - Bldg B-CENTRAL_r22.rtBasksrvsm.rvt

UNOFFICIAL COPY Official bid documents, plan holder's list, and addenda (if applicable) are available on BXWA.com

SECTION LEGEND

DESCRIPTION	SYMBOL AND TEXT
ASSEMBLY TYPES W = wall type R = roof type S = soffit type F = floor type	W
ELEVATION surface type designation T.O.F. = top of floor T.O.B. = top of bearing T.O.W. = top of wall	T.O.F.

GENERAL NOTES

NOTE

1. REFER TO BUILDING ASSEMBLY LEGEND FOR ASSEMBLY TYPES.
2. REFER TO SHEET G020 FOR STANDARD ABBREVIATIONS LIST.

SECTION NOTES

SYMBOL	NOTE
B501	MECHANICAL ROOF TOP UNIT
B502	MECHANICAL EQUIPMENT SCREEN (MES). REFER TO -/---

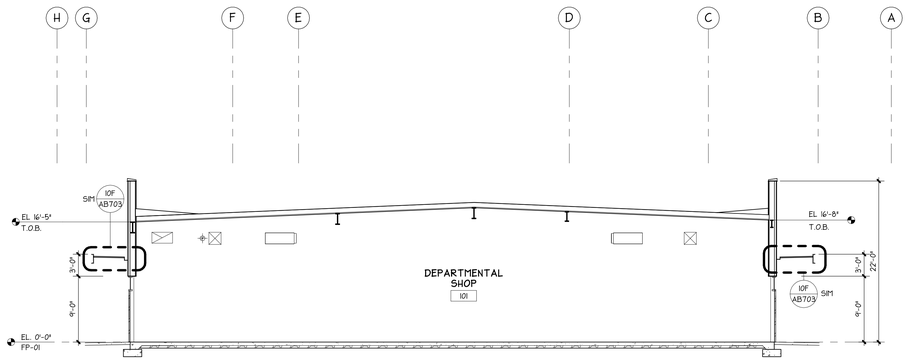

3B BUILDING SECTION
1/8" = 1'-0"

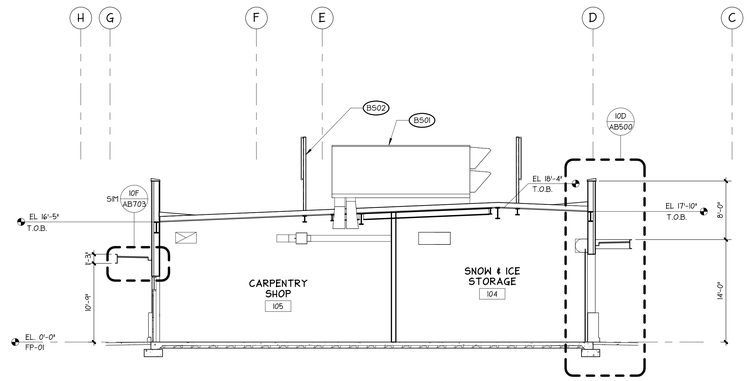

3G BUILDING SECTION
1/8" = 1'-0"

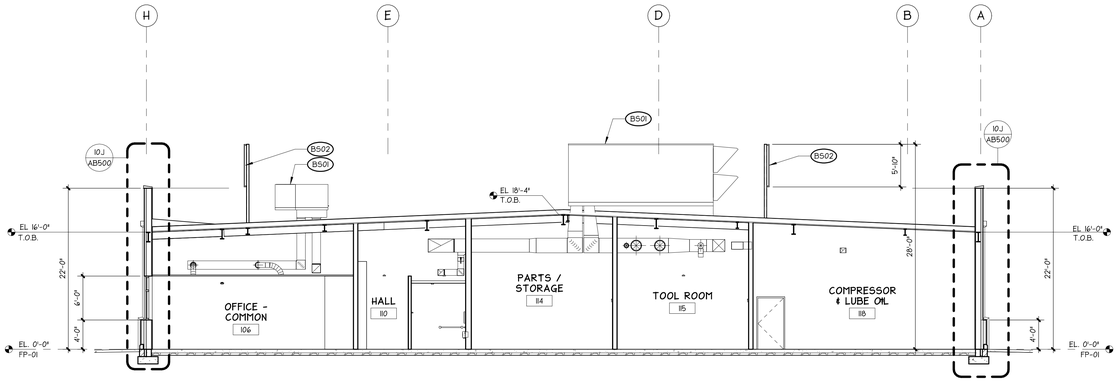

7B BUILDING SECTION
1/8" = 1'-0"

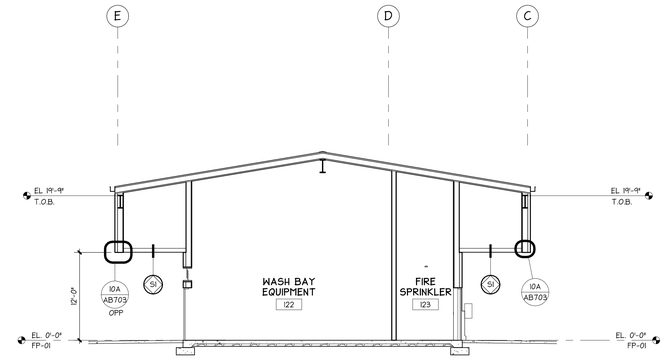

7G BUILDING SECTION
1/8" = 1'-0"

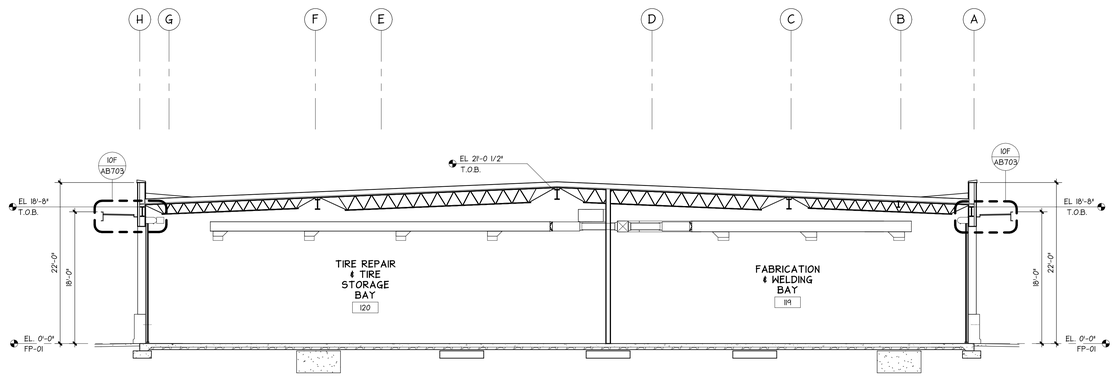

10B BUILDING SECTION
1/8" = 1'-0"

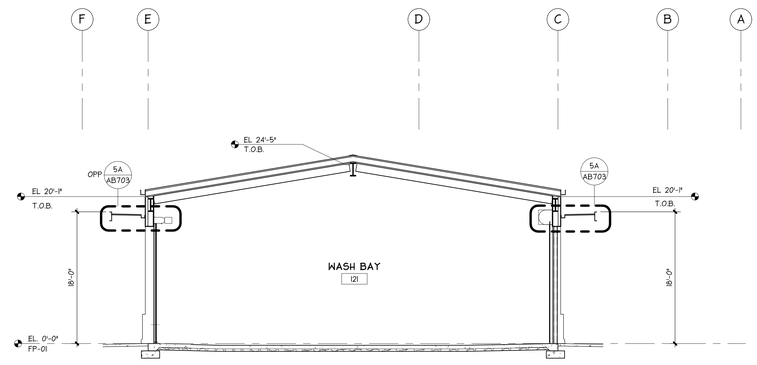

10G BUILDING SECTION
1/8" = 1'-0"

0' 2' 4' 8' 16'
SCALE: 1/8" = 1'-0"

Helix design group

AMERICAN INSTITUTE OF ARCHITECTS

1934 REGISTERED ARCHITECT FLOWELL GATE STATE OF WASHINGTON

HELIX DESIGN GROUP, INC

BUILDING SECTIONS

CITY OF FEDERAL WAY FLEET & SHOP BUILDING

FEDERAL WAY, WASHINGTON

REVISION	DATE

DATE	JOB NO.
05.06.24	a23-087

BID SET

AB401

DRAWING NO.

© HELIX DESIGN GROUP, INC.: All rights reserved. No part of this document may be reproduced in any form or by any means without permission in writing from Helix Design Group.

PLOTTED: 5/10/2024 3:30:33 PM PROJECT: a23-087 - CITY OF FEDERAL WAY
FILE PATH: C:\Sync\Revit_Local_2022\a23-087 Fed Way OPF - Bldg B_CENTRAL_r22.EBeckstrom.rvt

UNOFFICIAL COPY Official bid documents, plan holder's list, and addenda (if applicable) are available on BXWA.com

SECTION LEGEND

DESCRIPTION	SYMBOL AND TEXT
ASSEMBLY TYPES W = wall type R = roof type S = soffit type F = floor type	W0
ELEVATION surface type designation T.O.F. = top of floor T.O.B. = top of bearing T.O.W. = top of wall	T.O.F.

GENERAL NOTES

NOTE
1. REFER TO BUILDING ASSEMBLY LEGEND FOR ASSEMBLY TYPES.
2. REFER TO SHEET G020 FOR STANDARD ABBREVIATIONS LIST.

SECTION NOTES

SYMBOL	NOTE
HS01	1/4" STEEL PLATE AT DOOR HEAD AND JAMB, TYPICAL
HS02	SINGLE PLY ROOFING TERMINATED AT COUNTER FLASHING OF COPING, WITH SELF-ADHERENG MEMBRANE FLASHING UNDER COPING.
HS03	ROCK WOOL INSULATION
HS04	ROOF DRAIN LINE, REFER TO CIVIL
HS05	RIGID PERIMETER INSULATION
HS06	CONCRETE FOOTING PER STRUCTURAL
HS07	SLOPE GRADE AWAY FROM BUILDING
HS08	STRUCTURAL BRACE FRAME WHERE OCCURS
HS09	STRUCTURAL STEEL BEAM
HS10	BLOCKING AT TOP OF WALL FINISH, TYPICAL
HS11	6" METAL STUD BLOCKING, TOP AND BOTTOM, IN ADDITION TO 6'-0" O.C. ALONG IMP LENGTH (SPAN), TYPICAL.
HS12	DRAFT STOP, 9' AFF MAX.

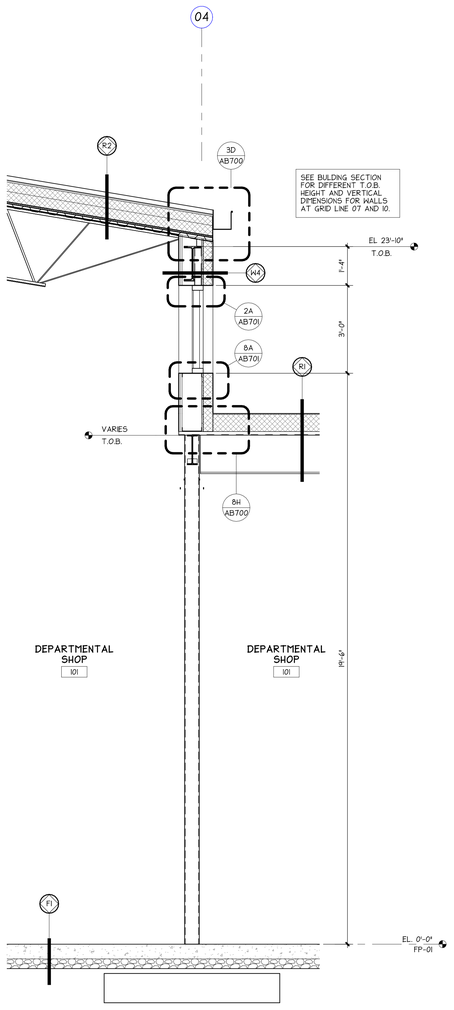

10B WALL SECTION
1/2" = 1'-0"

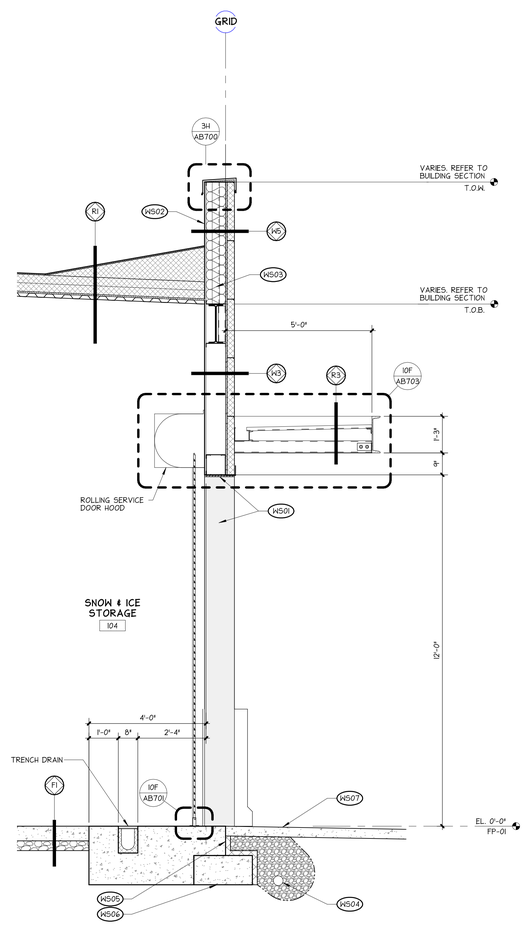

10D WALL SECTION
1/2" = 1'-0"

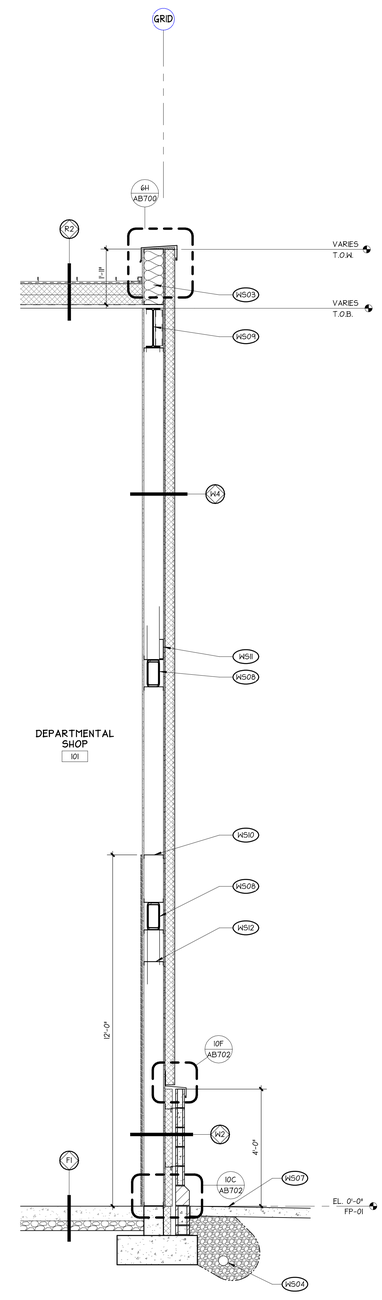

10G WALL SECTION
1/2" = 1'-0"

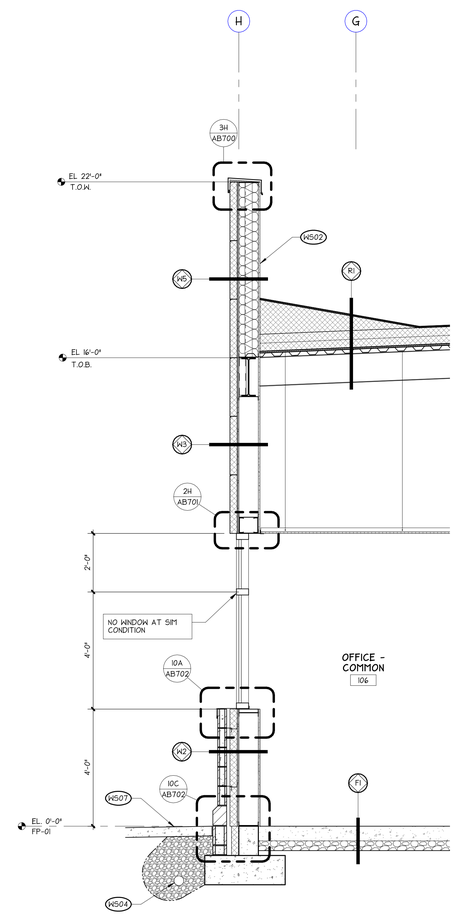

10J WALL SECTION
1/2" = 1'-0"

6" 2'
0' 1' 4'
SCALE: 1/2" = 1'-0"

Helix design group

AMERICAN INSTITUTE OF ARCHITECTS

1994 REGISTERED ARCHITECT FLOWEL GATE STATE OF WASHINGTON

HELIX DESIGN GROUP, INC

WALL SECTIONS

CITY OF FEDERAL WAY FLEET & SHOP BUILDING

FEDERAL WAY, WASHINGTON

REVISION	DATE

DATE	JOB NO.
05.06.24	a23-087

BID SET

AB500

DRAWING NO.

© HELIX DESIGN GROUP, INC.: All rights reserved. No part of this document may be reproduced in any form or by any means without permission in writing from Helix Design Group.

UNOFFICIAL COPY Official bid documents, plan holder's list and addenda (if applicable) are available on BXWA.com

PLOTTED: 5/10/2024 3:30:32 PM PROJECT: a23-087 - CITY OF FEDERAL WAY
FILE PATH: C:\Shared\Revit_Local\2022\a23-087 Fed Way OPP - Bldg B_CENTRAL_r22_EBeckstrom.rvt

SECTION LEGEND

DESCRIPTION	SYMBOL AND TEXT
ASSEMBLY TYPES W = wall type R = roof type S = soffit type F = floor type	W
ELEVATION surface type designation T.O.F. = top of floor T.O.B. = top of bearing T.O.W. = top of wall	T.O.F.

GENERAL NOTES

NOTE

1. REFER TO BUILDING ASSEMBLY LEGEND FOR ASSEMBLY TYPES.
2. REFER TO SHEET G020 FOR STANDARD ABBREVIATIONS LIST.

SECTION NOTES

SYMBOL	NOTE
MS01	1/4" STEEL PLATE AT DOOR HEAD AND JAMB, TYPICAL
MS02	SINGLE PLY ROOFING TERMINATED AT COUNTER FLASHING OF COPING, WITH SELF-ADHEREING MEMBRANE FLASHING UNDER COPING.
MS03	ROCK WOOL INSULATION
MS04	ROOF DRAIN LINE, REFER TO CIVIL
MS05	RIGID PERIMETER INSULATION
MS06	CONCRETE FOOTING PER STRUCTURAL
MS07	SLOPE GRADE AWAY FROM BUILDING
MS08	STRUCTURAL BRACE FRAME WHERE OCCURS
MS09	STRUCTURAL STEEL BEAM
MS10	BLOCKING AT TOP OF WALL FINISH, TYPICAL.
MS11	6" METAL STUD BLOCKING, TOP AND BOTTOM, IN ADDITION TO 6'-0" O.C. ALONG FRP LENGTH (SPAN), TYPICAL.
MS12	DRAFT STOP, 9' AFF MAX.

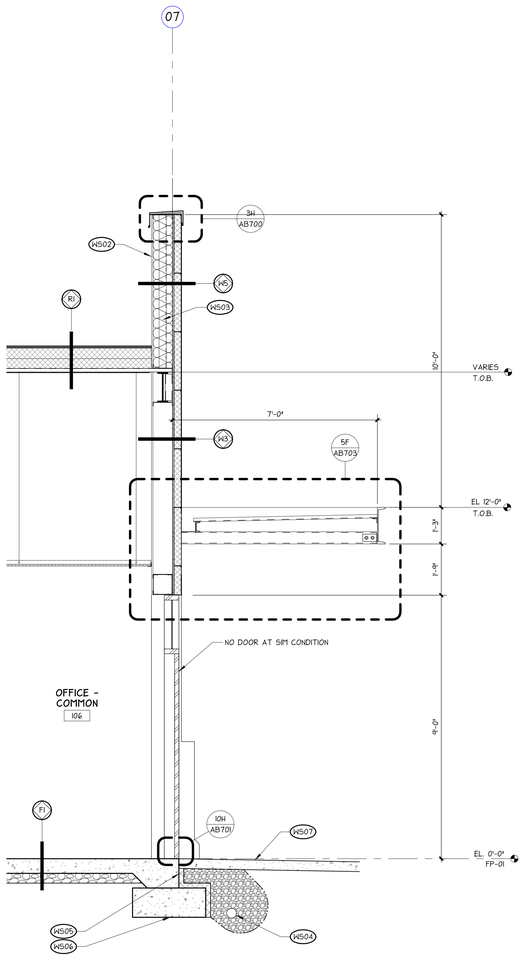

10B WALL SECTION
1/2" = 1'-0"

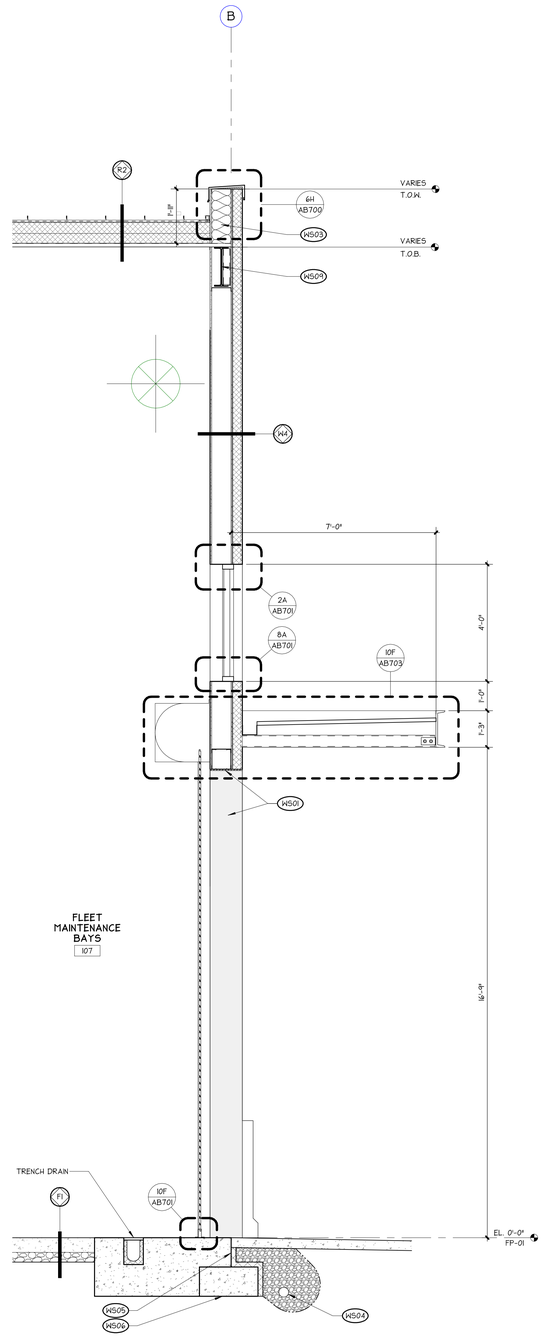

10E WALL SECTION
1/2" = 1'-0"

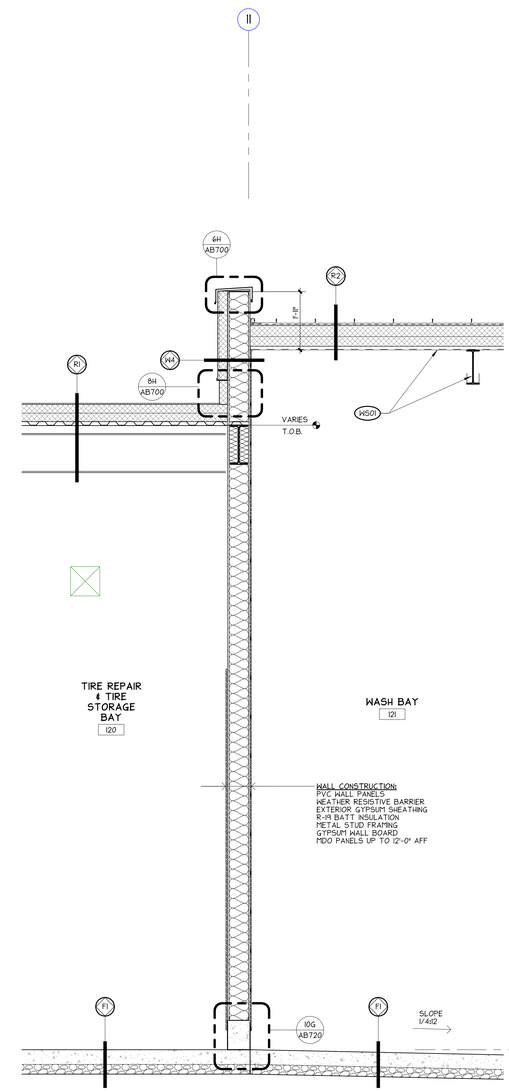

10H WALL SECTION
1/2" = 1'-0"

6" 2'
0' 1' 4'
SCALE: 1/2" = 1'-0"

Helix design group

AMERICAN INSTITUTE OF ARCHITECTS

1994 REGISTERED ARCHITECT FLOWELL GATE STATE OF WASHINGTON

HELIX DESIGN GROUP, INC

WALL SECTIONS

CITY OF FEDERAL WAY FLEET & SHOP BUILDING

FEDERAL WAY, WASHINGTON

REVISION	DATE

DATE	JOB NO.
05.06.24	a23-087

BID SET

DRAWING NO.
AB501

© HELIX DESIGN GROUP, INC.: All rights reserved. No part of this document may be reproduced in any form or by any means without permission in writing from Helix Design Group.

PLOTTED: 5/10/2024 3:30:33 PM PROJECT: a23-087 - CITY OF FEDERAL WAY
FILE PATH: C:\Users\Kevin\Local\2022\a23-087 Fed Way OPF - Bldg B-CENTRAL_r22.1.0basicsrvmn.rvt

UNOFFICIAL COPY Official bid documents, plan holder's list, and addenda (if applicable) are available on BXWA.com

T.O.O. = TOP OF OUTLET

A. ADA T.O.O.: 36" MAXIMUM
STANDARD T.O.O.: 38"-43"
B. CLEARANCE: 27"
C. KNEE SPACE: 17" TO 25"
D. ALCOVE WIDTH: 48" MIN. FOR HIGH-LOW FOUNTAIN
E. FRONT OF FOUNTAIN SHALL NOT EXTEND MORE THAN 4" BEYOND FACE OF ADJACENT WALL.
F. ALCOVE DEPTH: 24" MAX, OR CLEAR WIDTH MUST INCREASE TO 36"
G. BETWEEN CENTERS AT HIGH-LOW FOUNTAIN: 18"

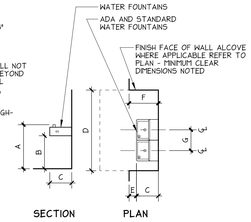

6C WATER FOUNTAIN ALCOVE
1/4" = 1'-0"

A. WIDTH AS INDICATED ON FLOOR PLAN. IF NOT INDICATED FULL LENGTH OF WALL.

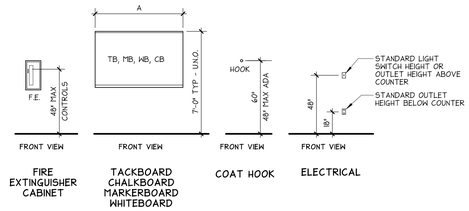

6G MISCELLANEOUS ITEMS
1/4" = 1'-0"

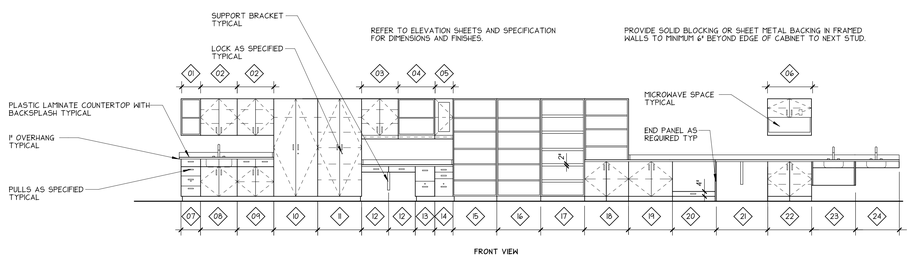

TYPICAL CABINET LEGEND NOTES

01 OPEN WALL CABINET WITH ADJUSTABLE SHELVING.
02 WALL CABINET WITH DOORS AND ADJUSTABLE SHELVING.
03 WALL CABINET WITH DOORS ADJUSTABLE SHELVING AND INTEGRAL LIGHT VALANCE.
04 OPEN WALL CABINET WITH ADJUSTABLE SHELVING AND INTEGRAL LIGHT VALANCE.
05 WALL CABINET WITH GLASS PANEL DOORS, ADJUSTABLE SHELVING AND INTEGRAL LIGHT VALANCE.
06 WALL CABINET WITH DOORS AND ADJUSTABLE SHELVING ABOVE. OPEN WALL CABINET FOR MICROWAVE AND INTEGRAL LIGHT VALANCE BELOW. PROVIDE ELECTRICAL OUTLET IN CABINET ABOVE MICROWAVE SHELF WITH GROMMET (BLACK) FROM SHELF INTO CABINET.
07 BASE CABINET WITH DRAWERS. LOCKING HARDWARE AS SPECIFIED.
08 BASE CABINET WITH SINK, APRON AND DOORS.
09 BASE CABINET WITH DRAWERS. ADJUSTABLE SHELVING AND DOORS.
10 FULL HEIGHT WARDROBE CABINET WITH ROD, SHELF AND DOORS. HARDWARE AS SPECIFIED.
11 FULL HEIGHT STORAGE CABINET WITH DOORS AND ADJUSTABLE SHELVING. LOCKING HARDWARE AS SPECIFIED.
12 PENCIL DRAWER SUSPENDED BELOW COUNTERTOP.
13 BASE CABINET WITH FILE DRAWERS. LOCKING HARDWARE AS SPECIFIED.
14 BASE CABINET (2) DRAWER AND FILE. LOCKING HARDWARE AS SPECIFIED.
15 FULL HEIGHT CABINET, OPEN WITH ADJUSTABLE SHELVES.
16 FULL HEIGHT CABINET, OPEN WITH FIXED SHELVES.
17 FULL HEIGHT CABINET OPEN WITH FIXED SHELVING AND LIGHT VALANCE AT EACH SHELF FRONT EDGE.
18 FULL HEIGHT CABINET OPEN WITH ADJUSTABLE GLASS SHELVING ABOVE. BASE CABINET WITH DOORS AND ADJUSTABLE SHELF.
19 BASE CABINET WITH ADJUSTABLE SHELVING AND DOORS.
20 OPEN BASE CABINET WITH EXTENDING ROLL OUT PRINTER SHELF.
21 COUNTERTOP AND BACKSPLASH WITH SUPPORT BRACKETS. OPEN BELOW. PROVIDE CONTINUOUS SUPPORT LEDGER BELOW COUNTERTOP ALONG WALLS.
22 BASE CABINET WITH ADJUSTABLE SHELVING (DOUBLE SHELVES) AND DOORS.
23 ACCESSIBLE VANITY WITH SINK. REFER TO DETAIL -/--- .
24 COUNTERTOP AND BACKSPLASH WITH APRON BELOW.

8A STANDARD CABINET LEGEND
1/4" = 1'-0"

TYPICAL PLUMBING FIXTURE AND TOILET ROOM ACCESSORIES NOTES

PROVIDE SOLID BLOCKING OR SHEET METAL BACKING IN FRAMED WALLS TO MINIMUM 6" BEYOND EDGE OF ITEM TO THE NEXT STUD.

A. KNEE CLEARANCE: 27"

A. MIRROR WIDTH (U.N.O. ON INTERIOR ELEVATION). INDIVIDUAL LAVATORY: 24" CONTINUOUS COUNTER FULL WIDTH OF COUNTER

* 35" MAX IF NOT OVER COUNTER OR LAVATORY

SINGLE L-SHAPED; 54"x42" GRAB BAR MAY BE PROVIDED INSTEAD OF SEPARATE BARS

WHEN MOUNTED AT A COUNTER, CLEANSING PRODUCT DISPENSERS AND DISPOSALS WILL BE LOCATED ON THE SIDE WALL OR COUNTERTOP. DISPENSERS AND DISPOSALS CANNOT BE MOUNTED ON THE BACK WALL, ABOVE THE COUNTER. THE REACH HEIGHT IS DETERMINED BY THE REACH DEPTH. SEE TABLE BELOW FOR REACH DEPTH AND REACH HEIGHTS.

A. MAX REACH DEPTH	0.5"	2"	5"	6"	9"	11"
B. MAX REACH HEIGHT	48"	46"	42"	40"	36"	34"

REFER TO INTERIOR ELEVATION FOR SHOWER GRAB BAR LENGTHS.

NOTE [1]: BACK WALL GRAB BAR SHALL NOT EXTEND ABOVE SEAT.

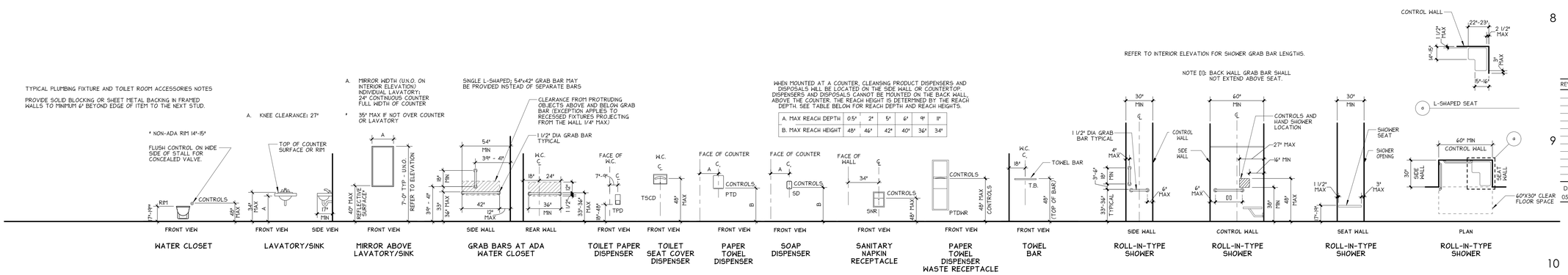

10A PLUMBING FIXTURE AND TOILET ACCESSORIES

UNOFFICIAL COPY Official bid documents, plan holder's list, and addenda (if applicable) are available on BXWA.com

PLOTTED: 5/10/2024 3:30:34 PM
FILE PATH: C:\Shared\Revit_Local_2022\a23-087 Fed Way OPB - Bldg B_CENTRAL_r22.1Basketroom.rvt
PROJECT: a23-087 - CITY OF FEDERAL WAY

Helix design group

AMERICAN INSTITUTE OF ARCHITECTS

1994 REGISTERED ARCHITECT FLOWELL GATE STATE OF WASHINGTON

HELIX DESIGN GROUP, INC

STANDARD CASEWORK AND FIXTURES

CITY OF FEDERAL WAY FLEET & SHOP BUILDING

FEDERAL WAY, WASHINGTON

REVISION	DATE

DATE	JOB NO.
05.06.24	a23-087

BID SET

DRAWING NO.

AB600

© HELIX DESIGN GROUP, INC.: All rights reserved. No part of this document may be reproduced in any form or by any means without permission in writing from Helix Design Group.

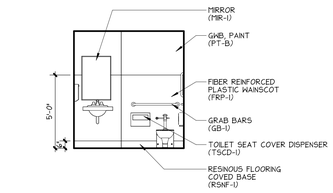

3A TOILET - 102 / 103 (SIM OPP)
1/4" = 1'-0"

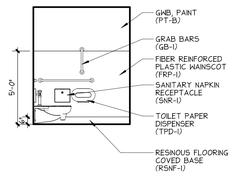

3C TOILET - 102 / 103 (SIM OPP)
1/4" = 1'-0"

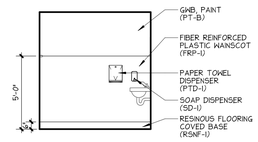

3F TOILET - 102 / 103 (SIM OPP)
1/4" = 1'-0"

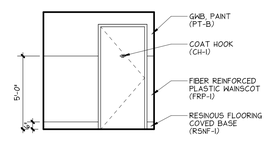

3H TOILET - 102 / 103 (SIM OPP)
1/4" = 1'-0"

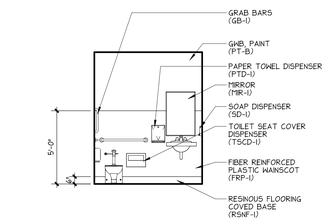

5A TOILET - 112
1/4" = 1'-0"

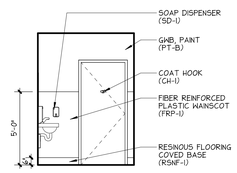

5C TOILET - 112
1/4" = 1'-0"

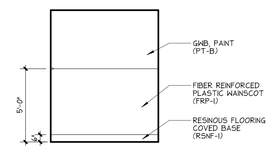

5F TOILET - 112
1/4" = 1'-0"

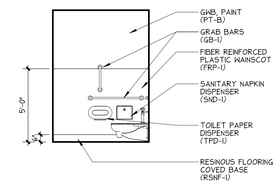

5H TOILET - 112
1/4" = 1'-0"

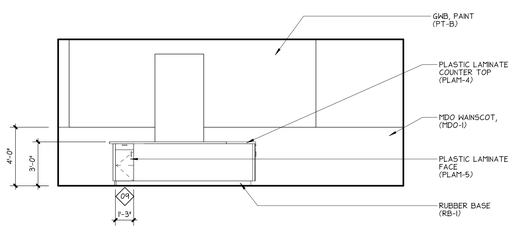

7A OFFICE-COMMON - 106
1/4" = 1'-0"

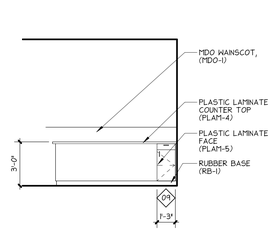

7D OFFICE-COMMON - 106
1/4" = 1'-0"

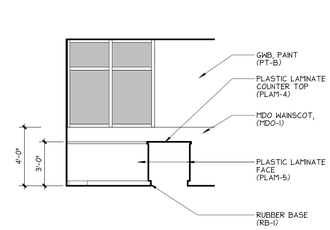

7F OFFICE-COMMON - 106
1/4" = 1'-0"

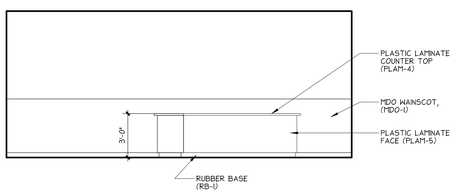

8A OFFICE-COMMON - 106
1/4" = 1'-0"

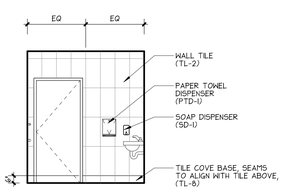

10A TOILET/SHOWER 113
1/4" = 1'-0"

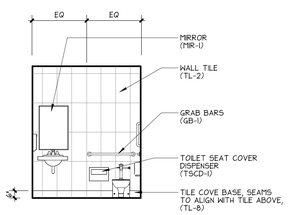

10C TOILET/SHOWER 113
1/4" = 1'-0"

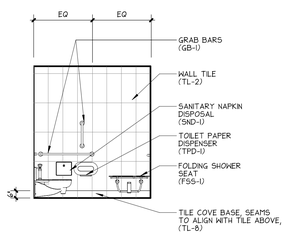

10E TOILET/SHOWER 113
1/4" = 1'-0"

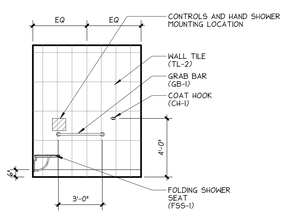

10G TOILET/SHOWER 113
1/4" = 1'-0"

PLOTTED: 5/10/2024 3:30:35 PM PROJECT: a23-087 - CITY OF FEDERAL WAY
FILE PATH: C:\Users\Kevin\Local\2022\a23-087 Fed Way OPP - Bldg B-CENTRAL_r22.rtBackup\rvt-r1

UNOFFICIAL COPY Official bid documents, plan holder's list, and addenda (if applicable) are available on BXWA.com

Helix design group

AMERICAN INSTITUTE OF ARCHITECTS

8934 REGISTERED ARCHITECT
FLOWELL GATE
STATE OF WASHINGTON

HELIX DESIGN GROUP, INC

INTERIOR ELEVATIONS

CITY OF FEDERAL WAY FLEET & SHOP BUILDING

FEDERAL WAY, WASHINGTON

REVISION	DATE

DATE	JOB NO.
05.06.24	a23-087

BID SET

AB601

DRAWING NO.

© HELIX DESIGN GROUP, INC.: All rights reserved. No part of this document may be reproduced in any form or by any means without permission in writing from Helix Design Group.

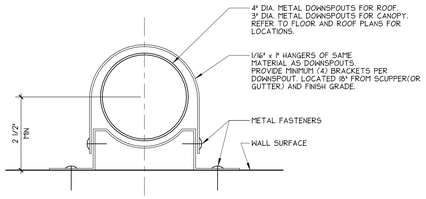

3A DETAIL
6" = 1'-0"

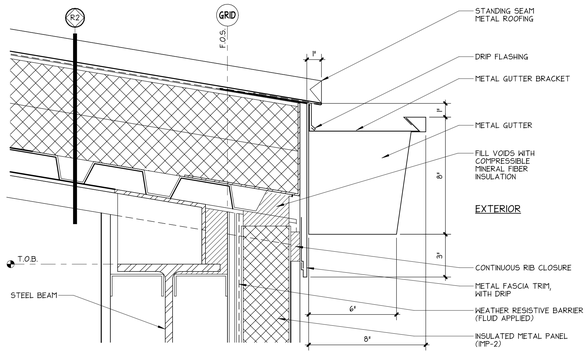

3D DETAIL
3" = 1'-0"

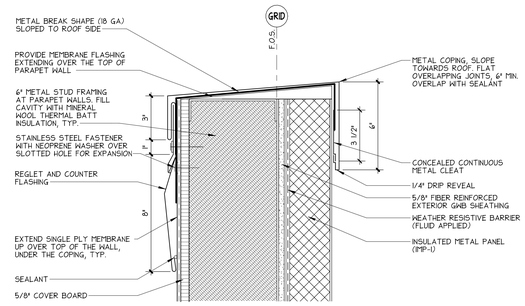

3H DETAIL
3" = 1'-0"

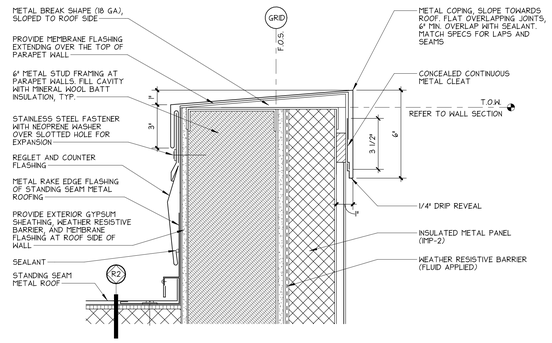

6H DETAIL
3" = 1'-0"

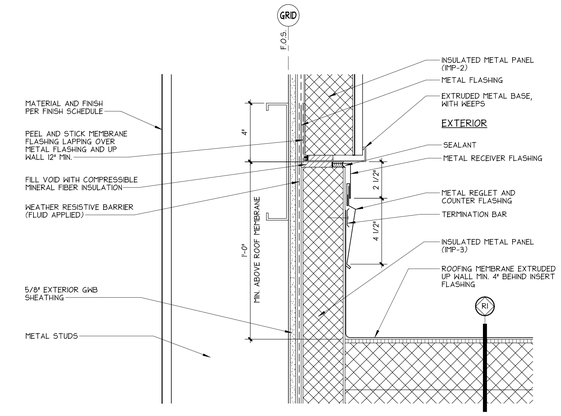

8H DETAIL
3" = 1'-0"

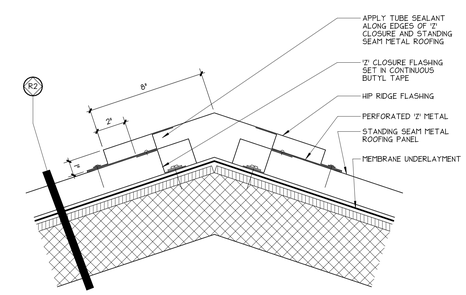

10H DETAIL
3" = 1'-0"

Helix design group

AMERICAN INSTITUTE OF ARCHITECTS

8934 REGISTERED ARCHITECT FLOWELL GATE STATE OF WASHINGTON

HELIX DESIGN GROUP, INC

EXTERIOR DETAILS

CITY OF FEDERAL WAY FLEET & SHOP BUILDING

FEDERAL WAY, WASHINGTON

REVISION	DATE

DATE	JOB NO.
05.06.24	a23-087

BID SET

AB700

DRAWING NO.

© HELIX DESIGN GROUP, INC.: All rights reserved. No part of this document may be reproduced in any form or by any means without permission in writing from Helix Design Group.

UNOFFICIAL COPY Official bid documents, plan holder's list, and addenda (if applicable) are available on BXWA.com

PLOTTED: 5/10/2024 3:30:36 PM PROJECT: a23-087 - CITY OF FEDERAL WAY
FILE PATH: G:\Shared\Revit_Local\a2022\a23-087 Fed Way OPP - Bldg B_CENTRAL_r22.2Bckup.rvt

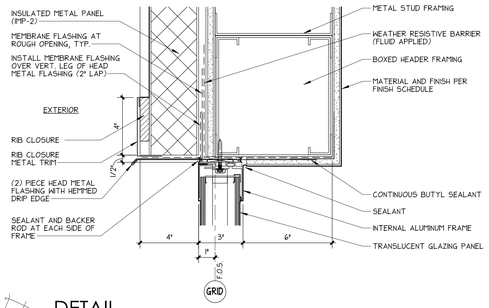

2A DETAIL
3" = 1'-0"

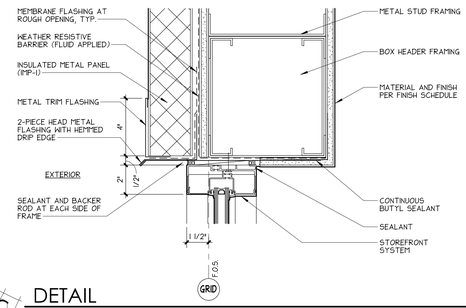

2C DETAIL
3" = 1'-0"

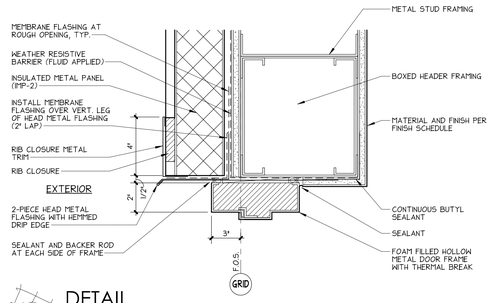

2F DETAIL
3" = 1'-0"

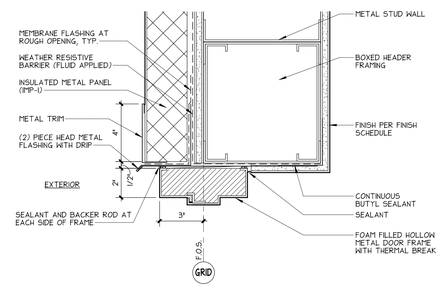

2H DETAIL
3" = 1'-0"

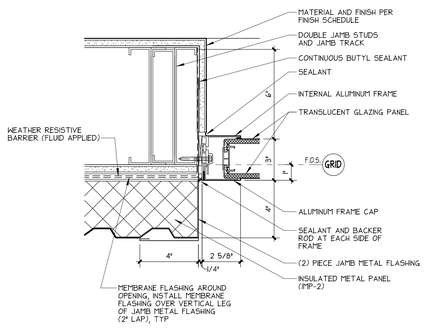

5A DETAIL
3" = 1'-0"

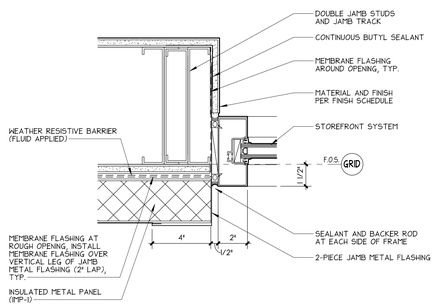

5C DETAIL
3" = 1'-0"

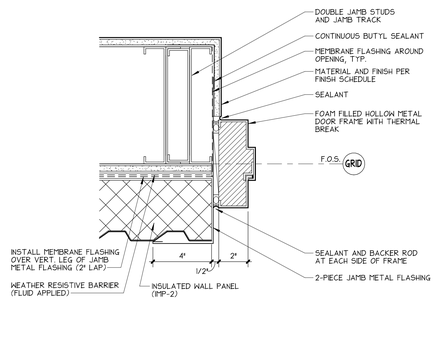

5F DETAIL
3" = 1'-0"

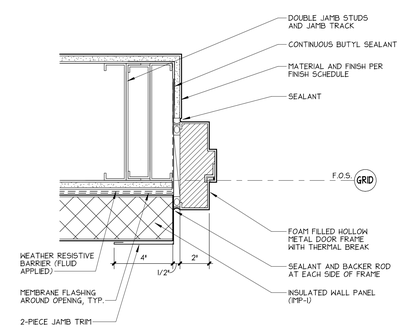

5H DETAIL
3" = 1'-0"

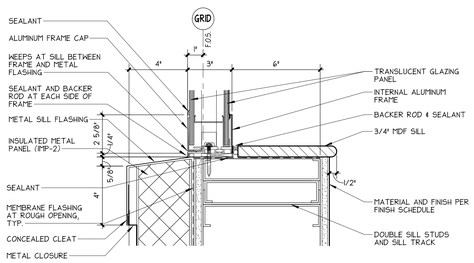

8A DETAIL
3" = 1'-0"

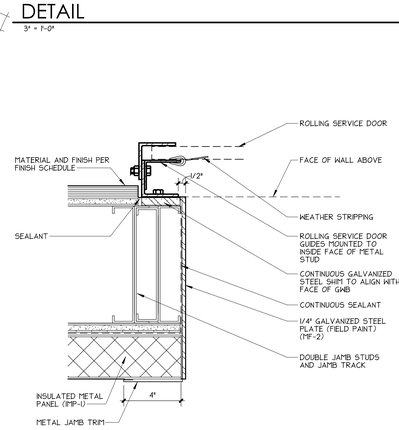

8F DETAIL
3" = 1'-0"

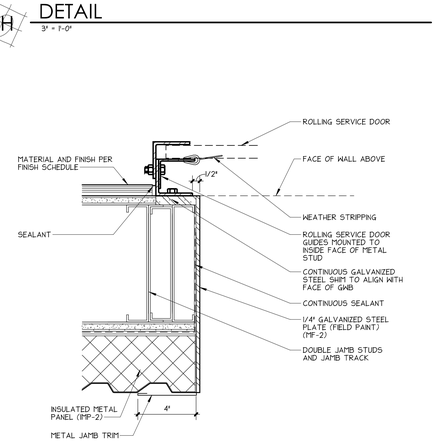

8H DETAIL
3" = 1'-0"

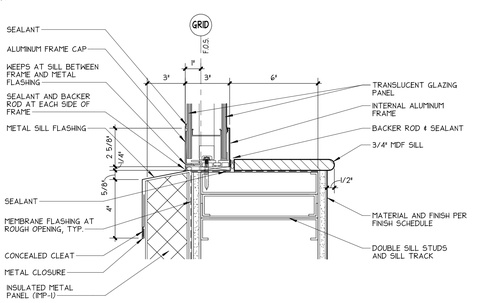

10A DETAIL
3" = 1'-0"

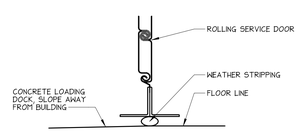

10F DETAIL
3" = 1'-0"

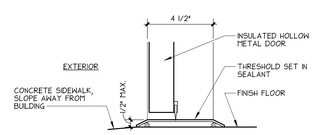

10H DETAIL
3" = 1'-0"

PLOTTED: 5/10/2024 3:30:36 PM PROJECT: a23-087 - CITY OF FEDERAL WAY
FILE PATH: C:\Users\Kevin.Lee\documents\2022\a23-087 Fed Way OFF - Bldg B-CENTRAL_r22.1Ebaksirom.rvt
UNOFFICIAL COPY Official bid documents, plan holder's list, and addenda (if applicable) are available on BXWA.com

Helix design group

AMERICAN INSTITUTE OF ARCHITECTS

8934 REGISTERED ARCHITECT FLOWEL GATE STATE OF WASHINGTON

HELIX DESIGN GROUP, INC

EXTERIOR DETAILS

CITY OF FEDERAL WAY FLEET & SHOP BUILDING

FEDERAL WAY, WASHINGTON

REVISION	DATE

DATE	JOB NO.
05.06.24	a23-087

BID SET

AB701

DRAWING NO.

© HELIX DESIGN GROUP, INC.: All rights reserved. No part of this document may be reproduced in any form or by any means without permission in writing from Helix Design Group.

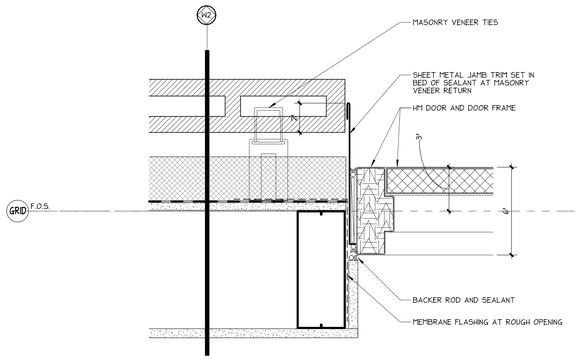

4A DETAIL
3" = 1'-0"

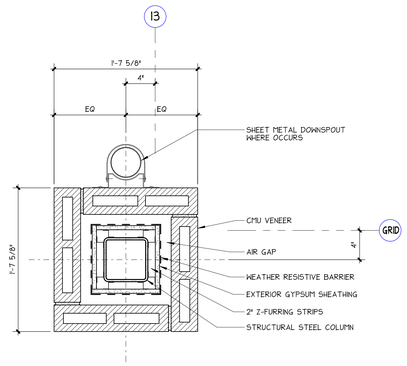

3D DETAIL
1 1/2" = 1'-0"

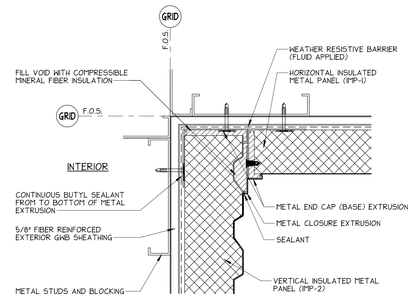

3F DETAIL
3" = 1'-0"

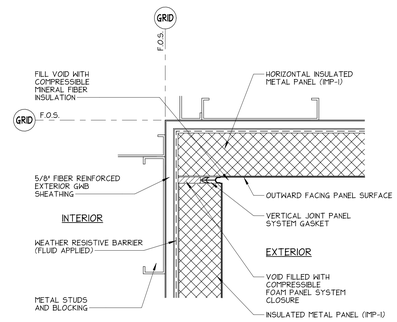

3H DETAIL
3" = 1'-0"

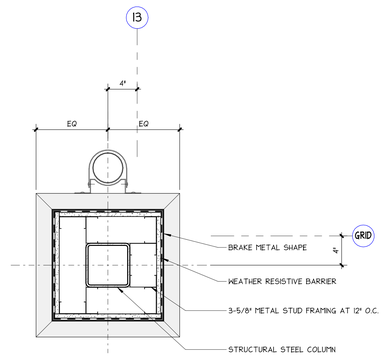

6D DETAIL
1 1/2" = 1'-0"

SEE 3D/AB702 FOR DETAIL AT CMU BASE

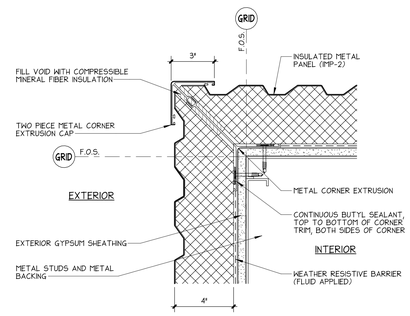

6F DETAIL
3" = 1'-0"

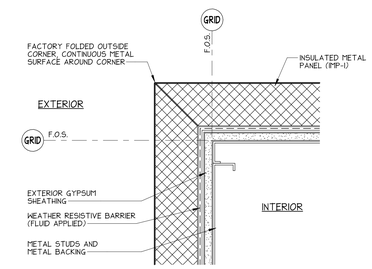

6H DETAIL
3" = 1'-0"

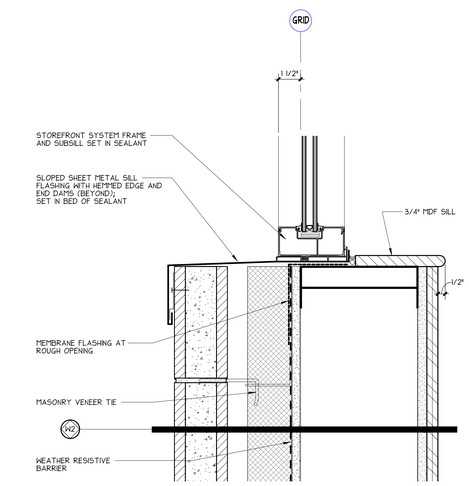

10A DETAIL
3" = 1'-0"

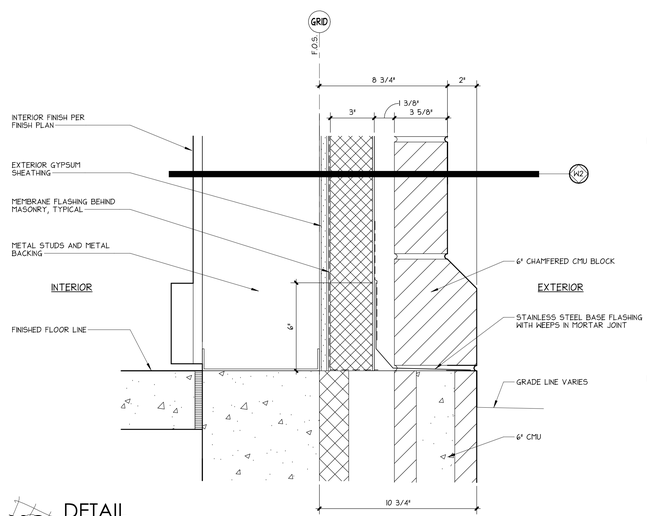

10C DETAIL
3" = 1'-0"

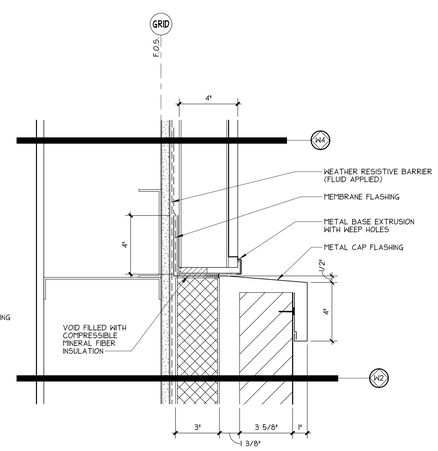

10F DETAIL
3" = 1'-0"

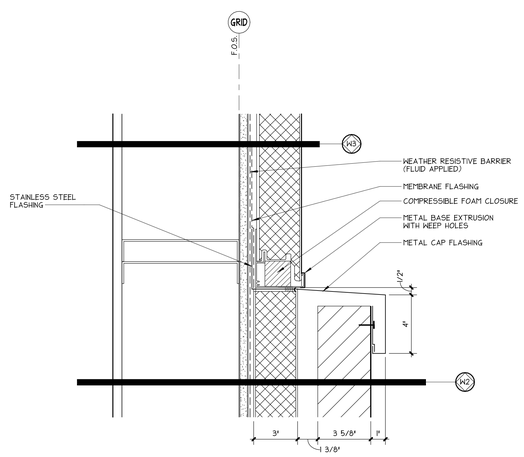

10H DETAIL
3" = 1'-0"

PLOTTED: 5/01/2024 3:30:38 PM PROJECT: a23-087 - CITY OF FEDERAL WAY
FILE PATH: C:\Sync\Revit_Local_2022\a23-087 Fed Way Off - Bldg B_CENTRAL_r22.EBackstream.rvt

UNOFFICIAL COPY Official bid documents, plan holder's list, and addenda (if applicable) are available on BXWA.com

Helix design group

AMERICAN INSTITUTE OF ARCHITECTS

6934 REGISTERED ARCHITECT FLOWEL GATE STATE OF WASHINGTON

HELIX DESIGN GROUP, INC

EXTERIOR DETAILS

CITY OF FEDERAL WAY FLEET & SHOP BUILDING

FEDERAL WAY, WASHINGTON

REVISION	DATE

DATE	JOB NO.
05.06.24	a23-087

BID SET

AB702

DRAWING NO.

© HELIX DESIGN GROUP, INC.: All rights reserved. No part of this document may be reproduced in any form or by any means without permission in writing from Helix Design Group.

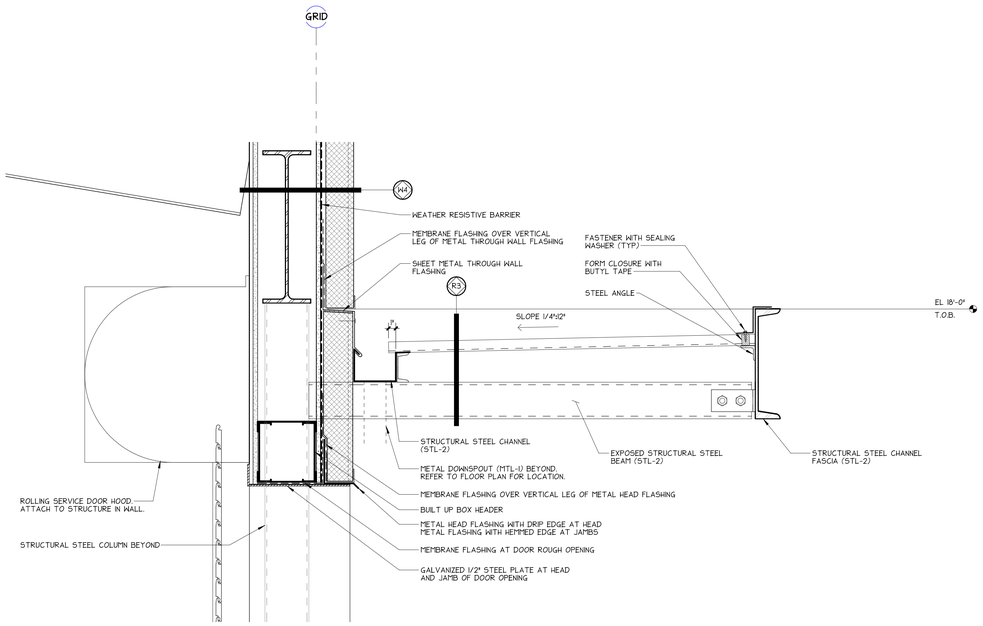

5A DETAIL
1 1/2" = 1'-0"

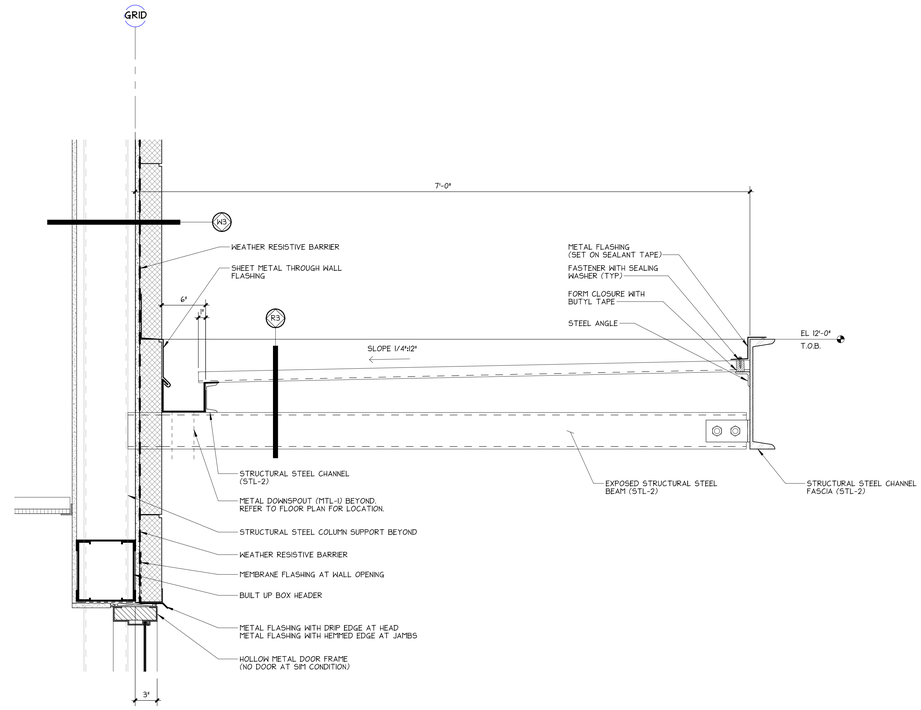

5F DETAIL
1 1/2" = 1'-0"

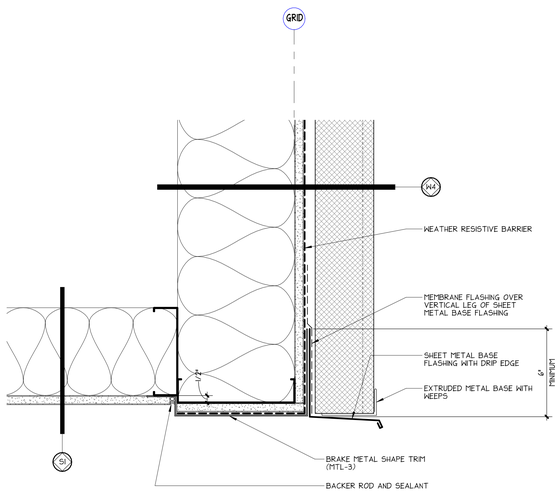

10A DETAIL
3" = 1'-0"

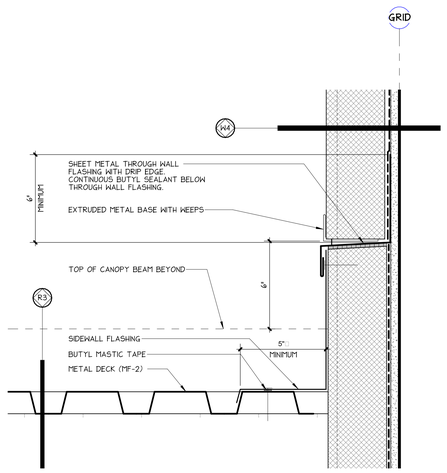

10C DETAIL
3" = 1'-0"

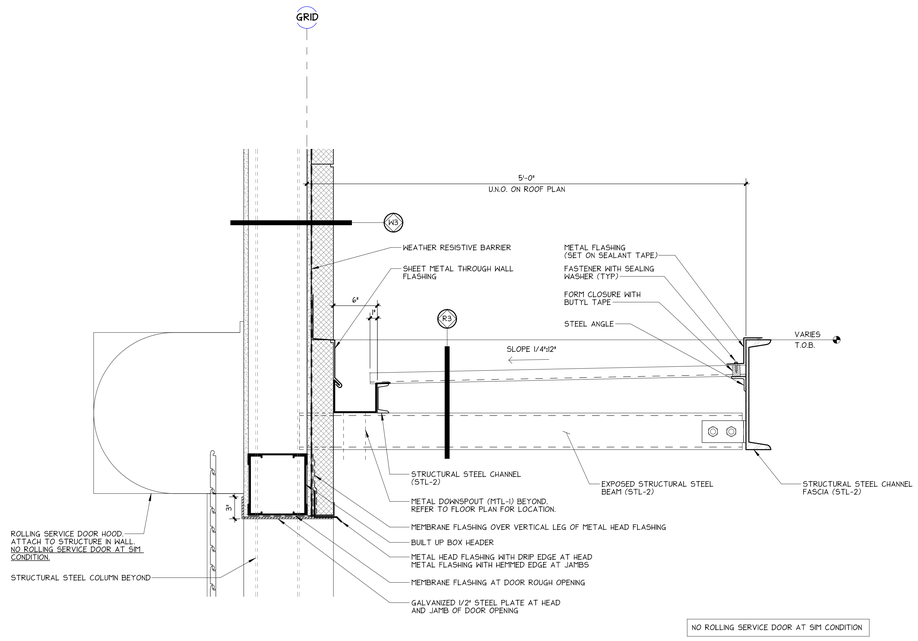

10F DETAIL
1 1/2" = 1'-0"

Helix design group

AMERICAN INSTITUTE OF ARCHITECTS

8934 REGISTERED ARCHITECT FLOWEL GATE STATE OF WASHINGTON

HELIX DESIGN GROUP, INC

EXTERIOR DETAILS

CITY OF FEDERAL WAY FLEET & SHOP BUILDING

FEDERAL WAY, WASHINGTON

REVISION	DATE

DATE	JOB NO.
05.06.24	a23-087

BID SET

AB703

DRAWING NO.

© HELIX DESIGN GROUP, INC.: All rights reserved. No part of this document may be reproduced in any form or by any means without permission in writing from Helix Design Group.

PLOTTED: 5/10/2024 3:30:39 PM PROJECT: a23-087 - CITY OF FEDERAL WAY
FILE PATH: C:\Users\Kevin.Lee.dir\2022\a23-087 Fed Way OPF - Bldg B-CENTRAL_r22.1Ebaksirom.rvt

UNOFFICIAL COPY Official bid documents, plan holder's list, and addenda (if applicable) are available on BXWA.com

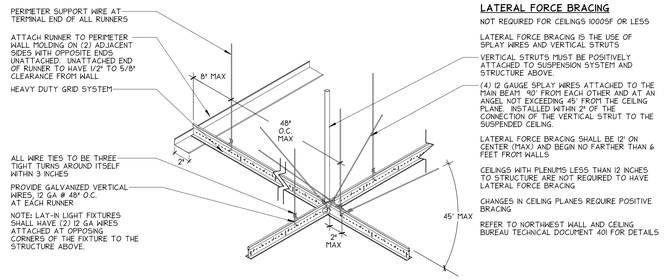

3F DETAIL
1 1/2" = 1'-0"

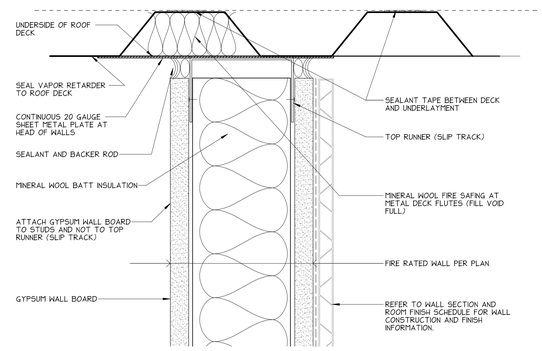

6G DETAIL
6" = 1'-0"

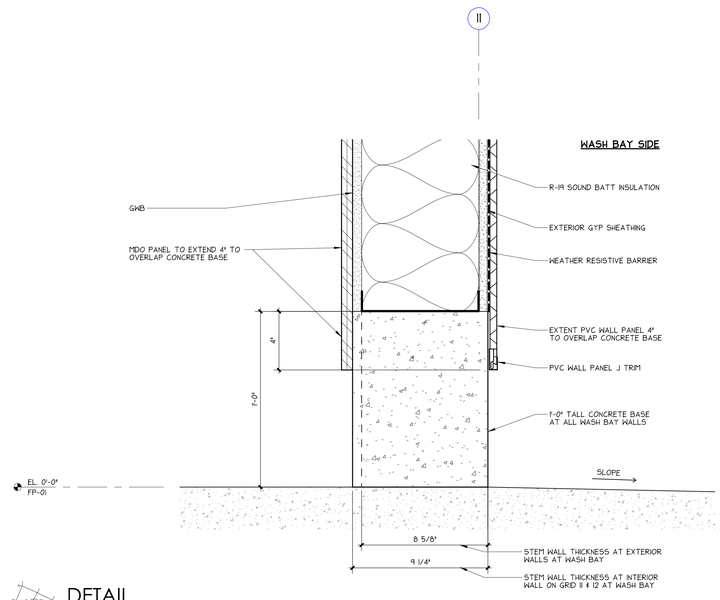

10G DETAIL
3" = 1'-0"

Helix design group

AMERICAN INSTITUTE OF ARCHITECTS

6934 REGISTERED ARCHITECT FLOWELL GATE STATE OF WASHINGTON

HELIX DESIGN GROUP, INC

INTERIOR DETAILS

CITY OF FEDERAL WAY FLEET & SHOP BUILDING

FEDERAL WAY, WASHINGTON

REVISION	DATE

DATE	JOB NO.
05.06.24	a23-087

BID SET

AB720

DRAWING NO.

© HELIX DESIGN GROUP, INC.: All rights reserved. No part of this document may be reproduced in any form or by any means without permission in writing from Helix Design Group.

UNOFFICIAL COPY Official bid documents, plan holder's list, and addenda (if applicable) are available on BXWA.com

PLOTTED: 5/10/2024 3:30:39 PM PROJECT: a23-087 - CITY OF FEDERAL WAY
FILE PATH: G:\Shared\Revit_Local\2022\a23-087 Fed Way CPF - Bldg B_CENTRAL_22.EBasbrisment

1. STRUCTURAL NOTES

1.1. ANY DISCREPANCY FOUND AMONG THE DRAWINGS, SPECIFICATIONS, THESE NOTES, AND THE SITE CONDITIONS SHALL BE REPORTED TO THE ARCHITECT AND THE STRUCTURAL ENGINEER, WHO SHALL CORRECT SUCH DISCREPANCY IN WRITING. ANY WORK DONE BY THE CONTRACTOR AFTER DISCOVERY OF SUCH DISCREPANCY SHALL BE DONE AT THE CONTRACTOR'S RISK. THE CONTRACTOR SHALL VERIFY AND COORDINATE THE DIMENSIONS AMONG ALL DRAWINGS PRIOR TO PROCEEDING WITH ANY WORK OR FABRICATION. THE CONTRACTOR IS RESPONSIBLE FOR ALL ERECTION BRACING, FORMWORK AND TEMPORARY CONSTRUCTION SHORING.

1.2. BY THE ACT OF SUBMITTING A BID FOR THE PROPOSED CONTRACT, THE CONTRACTOR WARRANTS THAT:

1.2.1. THE CONTRACTOR AND ALL SUBCONTRACTORS THEY INTEND TO USE (INCLUDING AGENTS AND SUPPLIERS) HAVE CAREFULLY AND THOROUGHLY REVIEWED THE DRAWINGS AND STRUCTURAL NOTES AND HAVE FOUND THEM COMPLETE AND FREE FROM AMBIGUITIES AND SUFFICIENT FOR THE PURPOSE INTENDED.

1.2.2. THE CONTRACTOR HAS CAREFULLY EXAMINED THE SITE OF THE WORK AND FROM THEIR OWN INVESTIGATIONS, THEY HAVE SATISFIED THEMSELF AS TO THE NATURE AND LOCATION OF THE WORK, AS TO THE CHARACTER, QUALITY, AND QUANTITIES OF MATERIAL AND DIFFICULTIES TO BE ENCOUNTERED, AS TO THE EXTENT OF EQUIPMENT AND OTHER FACILITIES NEEDED FOR THE PERFORMANCE OF THE WORK AND AS TO THE GENERAL AND LOCAL CONDITIONS, AND OTHER ITEMS WHICH MAY IN ANY WAY AFFECT THE WORK OR ITS PERFORMANCE.

1.2.3. THE CONTRACTOR AND ALL WORKERS THEY INTEND TO USE ARE SKILLED AND EXPERIENCED IN THE TYPE OF CONSTRUCTION REPRESENTED BY THE DRAWINGS AND DOCUMENTS BID UPON.

1.2.4. NEITHER THE CONTRACTOR NOR ANY OF THEIR EMPLOYEES, AGENTS, INTENDED SUPPLIERS, OR SUBCONTRACTORS HAVE RELIED UPON ANY VERBAL REPRESENTATIONS ALLEGEDLY AUTHORIZED OR UNAUTHORIZED FROM THE OWNER OR THEIR EMPLOYEES OR AGENTS, INCLUDING THE ARCHITECT OR ENGINEERS, IN ASSEMBLING THE BID FIGURES.

1.2.5. THE REQUIREMENTS CONTAINED WITHIN THIS SECTION SUPERSEDE REQUIREMENTS AND/OR RECOMMENDATIONS CONTAINED IN THE AISC "CODE OF STANDARD PRACTICE FOR STEEL BUILDING AND BRIDGES", AS WELL AS CASE DOCUMENT 962-D "A GUIDELINE ADDRESSING COORDINATION AND COMPLETENESS OF STRUCTURAL CONSTRUCTION DOCUMENTS"

1.2.6. THE CONTRACTOR AND ALL SUBCONTRACTORS THEY INTEND TO USE ARE AWARE OF AND ACKNOWLEDGE THAT CLOSE COORDINATION AMONG ARCHITECTURAL, STRUCTURAL, MECHANICAL, ELECTRICAL AND OTHER TRADE DRAWINGS IS REQUIRED.

1.2.7. THE CONTRACTOR AND ALL SUBCONTRACTORS THEY INTEND TO USE SHALL RECOGNIZE THAT THE PROJECT CONTRACT DOCUMENTS INCLUDE THE ARCHITECTURAL, STRUCTURAL, MECHANICAL AND ELECTRICAL AND OTHER TRADE DRAWINGS AND SPECIFICATIONS

1.2.8. CONTRACTOR AND ALL SUBCONTRACTORS ACKNOWLEDGE THAT CLOSE COORDINATION BETWEEN DISCIPLINES INCLUDED WITHIN THE CONTRACT DOCUMENTS IS NECESSARY. ELEMENTS THAT WILL REQUIRE CLOSE COORDINATION BY THE CONTRACTOR INCLUDE (BUT ARE NOT LIMITED TO):

A. VERIFICATION OF ALL DIMENSIONS INDICATED ON THE ARCHITECTURAL AND STRUCTURAL DRAWINGS
B. DETERMINATION OF ALL COLUMN LOCATIONS
C. DETERMINATION OF TOP OF FLOOR, TOP OF STEEL, WALL PLATE AND/OR TOP OF BEAM ELEVATIONS
D. DETERMINATION OF TOP OF FOOTING ELEVATIONS AND FOOTING STEP LOCATIONS
E. MECHANICAL/ELECTRICAL EQUIPMENT LOCATIONS AND WEIGHTS
F. LOCATION AND SIZE OF ALL MECHANICAL/ ELECTRICAL PENETRATIONS THROUGH WALLS AND FLOORS/ ROOFS
G. COORDINATION WITH DESIGNERS/ SUPPLIERS OF PRE-ENGINEERED COMPONENTS (JOISTS, TRUSSES, STAIRS, ETC.)

1.2.9. THE CONTRACTOR ACKNOWLEDGES THAT TEMPORARY SHORING AND/OR BRACING MAY BE REQUIRED TO COMPLETE THE PROJECT. DESIGN AND IMPLEMENTATION OF TEMPORARY SHORING AND/OR BRACING DURING CONSTRUCTION IS THE SOLE RESPONSIBILITY OF THE CONTRACTOR.

1.2.10. THE CONTRACTOR AND ALL SUBCONTRACTORS THEY INTEND TO USE SHALL MAKE CONSIDERATION FOR, AND INCLUDE MONIES FOR THE ABOVE IN THE PREPARATION OF THEIR BIDS.

1.2.11. THE CONTRACTOR SHALL NOT SCALE THE ARCHITECTURAL AND STRUCTURAL DRAWINGS FOR LOCATIONS OF ELEMENTS NOTED ABOVE.

1.2.12. ELECTRONIC COPIES OF THE STRUCTURAL DRAWINGS (PDF'S, CAD DRAWINGS OR BIM MODELS) MAY BE PROVIDED TO THE CONTRACTOR FOR THEIR USE. THESE FILES MAY BE PROVIDED AT THE REQUEST OF THE CONTRACTOR FOR THEIR CONVENIENCE ONLY. THE CONTRACTOR AGREES THAT THESE FILES SHALL NOT SUPERSEDE INFORMATION SHOWN ON THE ORIGINAL BID/ CONSTRUCTION DOCUMENTS. THE CONTRACTOR AGREES TO HOLD THE STRUCTURAL ENGINEER HARMLESS FOR ANY ERRORS OR DISCREPANCIES CONTAINED WITHIN THESE ELECTRONIC FILES.

1.2.13. THE BID FIGURE IS BASED SOLELY UPON THE CONSTRUCTION CONTRACT DOCUMENTS AND PROPERLY ISSUED WRITTEN OR VERBAL REPRESENTATIONS.

1.3. CODES

1.3.1. ALL METHODS, MATERIALS AND WORKMANSHIP SHALL CONFORM TO THE 2018 INTERNATIONAL BUILDING CODE (IBC) AS AMENDED AND ADOPTED BY THE LOCAL BUILDING AUTHORITY.

1.3.2. ALL REFERENCES TO OTHER CODES, STANDARDS AND SPECIFICATIONS, (ACI, ASTM, ETC.), SHALL BE FOR THE EDITION CURRENTLY REFERENCED BY IBC AS AMENDED AND ADOPTED BY THE LOCAL BUILDING AUTHORITY.

1.4. DESIGN CRITERIA

1.4.1. UNIFORM LOADS:

LOCATION	LIVE LOAD	DEAD LOAD
ROOF (SOLAR READINESS ZONE **)	25 PSF (SNOW*)	ACTUAL +4 PSF +175 PSF (INVERTER)
SLAB ON GRADE	125 PSF OR 2000# CONCENTRATED LOAD	ACTUAL

* THIS IS NOT A GROUND SNOW LOAD

** SOLAR READINESS ZONE PER WA STATE ENERGY CODE, COMMERCIAL PROVISIONS, CHAPTER 51-11C WAC.

1.4.2. SNOW LOADS PER IBC SECTION 1608 AND CHAPTER 7 OF ASCE 7:

GROUND SNOW LOAD (P_g):	25.0 PSF
FLAT ROOF SNOW LOAD (P_f):	30.0 PSF
SNOW EXPOSURE FACTOR (C_e):	1.0
SNOW IMPORTANCE FACTOR (I_s):	1.2
THERMAL FACTOR (C_t):	1.0

1.4.3. CONCENTRATED LOADS: ALL MANUFACTURERS OF PRE-ENGINEERED COMPONENTS OR SYSTEMS SHALL LOCATE, COORDINATE, VERIFY WEIGHTS, ETC., OF MECHANICAL UNITS OR OTHER CONCENTRATED LOADS AND DESIGN THEIR SYSTEM FOR THESE LOADS.

1.4.4. CRANE LOADS: CRANE LOAD RATING SHALL BE AS INDICATED ON THE DRAWINGS. LIVE LOADS, MAXIMUM WHEEL LOADS, VERTICAL IMPACT FORCES AND LATERAL FORCES SHALL BE AS DESCRIBED IN IBC SECTION 1607.14.

1.4.5. WIND LOADS (PER IBC SECTION 1609 AND ASCE 7 CHAPTERS 26 THRU 30):

BASIC WIND SPEED (V):	108 MPH
RISK CATEGORY	IV
WIND EXPOSURE:	B
APPLICABLE INTERNAL PRESSURE COEFFICIENT:	+/-0.18
ENCLOSED STRUCTURE	
TOPOGRAPHIC FACTOR (K_{zt})	1.0

COMPONENTS AND CLADDING: ULTIMATE DESIGN WIND PRESSURES TO BE USED FOR THE DESIGN OF EXTERIOR COMPONENT AND CLADDING MATERIALS IS AS FOLLOWS:

ZONE:1	+16.0/-38.8 PSF (10 SQ FT)
ZONE:2e	+16.0/-38.8 PSF (10 SQ FT)
ZONE:2n	+16.0/-56.5 PSF (10 SQ FT)
ZONE:2r	+16.0/-56.5 PSF (10 SQ FT)
ZONE:3e	+16.0/-56.5 PSF (10 SQ FT)
ZONE:3r	+16.0/-67.2 PSF (10 SQ FT)
ZONE:4	+19.2/-20.8 PSF (10 SQ FT)
ZONE:5	+19.2/-25.6 PSF (10 SQ FT)

1.4.6. SEISMIC LOADS (PER IBC SECTION 1613 AND ASCE 7 CHAPTERS 11 THRU 13):

RISK CATEGORY:	IV
SEISMIC IMPORTANCE FACTOR (I_e):	1.50
S_s:	1.321
S_1:	0.453
SITE CLASS:	D
S_{DS}:	0.881
S_{D1}:	0.558
SEISMIC DESIGN CATEGORY:	D
DESIGN BASE SHEAR:	V = Cs x W
SEISMIC RESPONSE COEFFICIENT (C_S):	0.220
ANALYSIS PROCEDURE USED:	EQUIVALENT LATERAL FORCE PROCEDURE

* SITE CLASS D IS SELECTED AS THE DEFAULT SITE CLASS PER ASCE 7 SECTION 11.4.3 AND THE VALUE OF F_a = 1.2

SEISMIC FORCE-RESISTING SYSTEM	RESPONSE MODIFICATION COEFFICIENT, R	OVERSTRENGTH FACTOR, Ω_0
B. BUILDING FRAME SYSTEMS:		
2. STEEL SPECIAL CONCENTRICALLY BRACED FRAMES		
	6	2

NOTE: TABULATED OVERSTRENGTH FACTOR HAS BEEN REDUCED IN ACCORDANCE WITH ASCE 7 TABLE 12.2-1 FOOTNOTE B FOR STRUCTURES WITH FLEXIBLE DIAPHRAGMS.

1.5. STATEMENT OF SPECIAL INSPECTIONS

SEE STATEMENT OF SPECIAL INSPECTION AND TESTING SHEETS SB010 AND SB011.

1.6. SHOP DRAWINGS

1.6.1. SUBMIT SHOP DRAWINGS TO THE ARCHITECT/ENGINEER FOR THE FOLLOWING:

A. CONCRETE MIX DESIGN SUBMITTALS
B. REINFORCING STEEL
C. STRUCTURAL AND MISCELLANEOUS STEEL INCLUDING WELD INSERTS AND ANCHORS
D. STEEL ROOF DECK
E. PRE-ENGINEERED STEEL JOISTS
F. PRE-ENGINEERED FALL PROTECTION SYSTEM *
G. PRE-ENGINEERED CANOPY SYSTEMS *
H. MASONRY VENEER WALL TIES *

* DEFERRED SUBMITTALS: PRE-ENGINEERED ITEMS SHALL BE SUBMITTED TO THE BUILDING OFFICIAL AFTER REVIEW BY THE ENGINEER OR RECORD AS A DEFERRED SUBMITTAL.

1.6.2. SHOP DRAWING REVIEW NOTES

A. ENGINEER OF RECORD SHALL REVIEW SHOP DRAWINGS FOR GENERAL CONFORMANCE WITH THE PROJECT CONSTRUCTION DOCUMENTS (PLANS AND SPECIFICATIONS).
B. ENGINEER OF RECORD REVIEW OF SHOP DRAWINGS SHALL NOT RELIEVE THE GENERAL CONTRACTOR OF THEIR RESPONSIBILITY FOR REVIEW OF THE SHOP DRAWINGS FOR COMPLIANCE WITH THE PROJECT REQUIREMENTS.
C. APPROVAL OF THE SHOP DRAWINGS BY THE ENGINEER OF RECORD SHALL NOT BE CONSIDERED AS A GUARANTEE BY THE ENGINEER THAT THE SHOP DRAWINGS COMPLY WITH ALL PROJECT REQUIREMENTS.
D. CONCURRENT SHOP DRAWING REVIEW SHALL ONLY BE PERMITTED IF APPROVED BY THE ARCHITECT/ENGINEER OF RECORD PRIOR TO THE START OF SHOP DRAWING REVIEW.

1.7. MISCELLANEOUS

1.7.1. VERIFY ALL DIMENSIONS AND CONDITIONS IN THE FIELD.

1.7.2. VERIFY SIZE AND LOCATION OF ALL OPENINGS IN THE FLOORS, ROOF AND WALLS WITH ARCHITECTURAL, MECHANICAL AND ELECTRICAL DRAWINGS.

1.7.3. CONSTRUCTION DETAILS NOT SPECIFICALLY SHOWN ON THE DRAWINGS SHALL FOLLOW SIMILAR DETAILS OF SECTIONS OF THIS PROJECT AS APPROVED BY THE ARCHITECT/ ENGINEER.

1.7.4. SEE ARCHITECTURAL, MECHANICAL AND ELECTRICAL DRAWINGS FOR DIMENSIONS AND LOCATIONS OF OPENINGS NOT DIMENSIONED OR SHOWN ON STRUCTURAL PLANS.

1.7.5. SEE ARCHITECTURAL, MECHANICAL AND ELECTRICAL DRAWINGS FOR LOCATIONS AND WEIGHTS OF ALL MECHANICAL AND ELECTRICAL EQUIPMENT INCLUDING HOUSEKEEPING PADS.

1.7.6. FOR PIPES, CONDUITS, DUCTS AND MECHANICAL EQUIPMENT SUPPORTED OR BRACED FROM STRUCTURE: CONFORM TO SHEET METAL AND AIR CONDITIONING CONTRACTORS NATIONAL ASSOCIATION, INC., PUBLICATION "APPENDIX E: SEISMIC RESTRAINT MANUAL GUIDELINES FOR MECHANICAL SYSTEMS." ALL BRACING AND SUPPORTS SHALL BE DESIGNED FOR SEISMIC HAZARD LEVEL (SHL) B. SPRINKLER LINE ATTACHMENTS SHALL CONFORM TO NFPA PAMPHLET 13.

1.7.7. THE STRUCTURE HAS BEEN DESIGNED TO RESIST CODE REQUIRED VERTICAL AND LATERAL FORCES AFTER THE CONSTRUCTION OF ALL STRUCTURAL ELEMENTS HAS BEEN COMPLETED. STABILITY OF THE STRUCTURE PRIOR TO COMPLETION IS THE SOLE RESPONSIBILITY OF THE GENERAL CONTRACTOR. THIS RESPONSIBILITY INCLUDES BUT IS NOT LIMITED TO JOB SITE SAFETY: ERECTION MEANS, METHODS, AND SEQUENCES; TEMPORARY SHORING, FORMWORK, AND BRACING; USE OF EQUIPMENT AND CONSTRUCTION PROCEDURES.

1.7.8. SUSPENDED CEILINGS SUPPORTED OR BRACED FROM STRUCTURE: CONFORM TO NORTHWEST WALL AND CEILING BUREAU TECHNICAL BULLETIN 401 "SUSPENSION SYSTEMS FOR ACOUSTICAL LAY-IN CEILINGS SESISMIC DESIGN CATEGORIES D, E AND F."

2. SITE PREPARATION/SOIL REMEDIATION

2.1. SOIL DATA

ALLOWABLE SOIL PRESSURE 2,500 PSF. ALLOW 33-1/3% INCREASE FOR LOADS FROM WIND OR SEISMIC ORIGIN. SEE GEOTECHNICAL ENGINEERING REPORT BY MIGIZI GROUP, INC. DATED JUNE 15, 2023. SEE GEOTECH REPORT FOR ALL SUBGRADE PREPARATION REQUIREMENTS AS WELL AS CAPILLARY BREAK AND VAPOR BARRIER RECOMMENDATIONS.

2.1.1. RETAINING WALL DESIGN CRITERIA:

A.	ACTIVE EARTH PRESSURE:	35 PCF (ASSUMED)
B.	AT-REST EARTH PRESSURE:	50 PCF (ASSUMED)
C.	SEISMIC EARTH PRESSURE:	10 x "H" PSF (ASSUMED)
D.	PASSIVE EARTH PRESSURE:	225 PCF *
E.	FRICTION COEFFICIENT:	0.35 *

* INCLUDES FACTOR OF SAFETY OF 1.5

2.2. EXCAVATION

EXCAVATE TO DEPTH SHOWN AND TO FIRM UNDISTURBED MATERIAL. OVER-EXCAVATIONS SHALL BE BACKFILLED WITH LEAN CONCRETE (f'_c=500-1200 PSI) OR STRUCTURAL FILL AT THE CONTRACTOR'S EXPENSE. EXERCISE EXTREME CARE DURING EXCAVATION TO AVOID DAMAGE TO BURIED LINES, TANKS, AND OTHER CONCEALED ITEMS. UPON DISCOVERY, DO NOT PROCEED WITH WORK UNTIL RECEIVING WRITTEN INSTRUCTIONS FROM THE ARCHITECT. A COMPETENT REPRESENTATIVE OF THE OWNER SHALL INSPECT ALL FOOTING EXCAVATIONS FOR SUITABILITY OF BEARING SURFACES PRIOR TO PLACEMENT OF REINFORCING STEEL. PROVIDE DRAINAGE AS NECESSARY TO AVOID WATER-SOFTENED SUBGRADE.

2.3. FILL, BACKFILL AND COMPACTION

BACKFILL AGAINST WALLS SHALL NOT BE PLACED UNTIL AFTER THE REMOVAL OF ALL MATERIAL SUBJECT TO ROT OR CORROSION. ALL FILL PLACED AGAINST RETAINING WALLS OR BASEMENT WALLS SHALL BE FREE DRAINING GRANULAR MATERIAL. STRUCTURAL FILL OTHER THAN PEA GRAVEL SHALL BE GRANULAR PLACED IN 6-INCH LIFTS AND COMPACTED TO AT LEAST 95% OF ITS MAXIMUM DRY DENSITY AS DETERMINED BY ASTM D1557 (MOD PROCTOR). PEA GRAVEL FILL SHALL HAVE A MAXIMUM PARTICLE SIZE OF 3/8" DIAMETER.

3. STRUCTURAL CONCRETE

3.1. GENERAL

ALL CONCRETE SHALL BE HARD ROCK CONCRETE MEETING THE REQUIREMENTS OF ACI-301, "SPECIFICATIONS FOR STRUCTURAL CONCRETE FOR BUILDINGS." PROPORTIONING OF INGREDIENTS FOR EACH CONCRETE MIX SHALL BE BY METHOD 2 OR THE ALTERNATE PROCEDURE GIVEN IN ACI-301. PLACE CONCRETE PER ACI-304 AND CONFORM TO ACI-604 (306) FOR WINTER CONCRETING AND ACI-605 (305) FOR HOT WEATHER CONCRETING. USE INTERIOR MECHANICAL VIBRATORS WITH 7,000 RPM MINIMUM FREQUENCY. DO NOT OVER-VIBRATE. CONCRETE SHALL BE PLACED MONOLITHICALLY BETWEEN CONSTRUCTION OR CONTROL JOINTS. PROTECT ALL CONCRETE FROM PREMATURE DRYING, EXCESSIVE HOT OR COLD TEMPERATURE FOR SEVEN DAYS AFTER PLACING.

3.2. STRENGTH

TWENTY-EIGHT DAY COMPRESSIVE STRENGTHS (f'_c) SHALL BE AS FOLLOWS WITH EXPOSURE CATEGORY AND CLASS PER ACI TABLE 19.3.1.1 GIVEN IN PARENTHESIS:

SLABS ON GRADE (F0/S0/W0/C0)	4000 PSI
FOOTINGS (F0/S0/W0/C1)	3000 PSI
VERTICALLY FORMED WALLS (F1/S0/W0/C0)	4000 PSI *

* MAXIMUM W/C RATIO SHALL BE 0.55

CONCRETE SUPPLIER TO PROVIDE TEST RECORDS PER SECTION 26.4 OF ACI 318. WHEN NO PRIOR EXPERIENCE OR TRIAL MIXTURE DATA ARE AVAILABLE, THE WATER/CEMENT RATIO FROM THE TABLE BELOW MAY BE USED, BUT ONLY WHEN SPECIAL PERMISSION IS GIVEN BY ENGINEER.

MAXIMUM ABSOLUTE WATER/CEMENT RATIO BY WEIGHT FOR CONCRETE MIXES WITHOUT TEST RECORDS SHALL BE AS FOLLOWS:

SPECIFIED COMPRESSIVE STRENGTH	NON-AIR ENTRAINED CONCRETE	AIR-ENTRAINED CONCRETE
3000 PSI	0.58	0.46
4000 PSI	0.44	0.35

3.3. MATERIALS

3.3.1. CEMENT: ASTM C150, TYPE I OR TYPE II. ENGINEER'S APPROVAL IS NEEDED FOR USE OF TYPE III CEMENT.

3.3.2. COARSE AND FINE AGGREGATE: ASTM C33.

3.3.3. WATER SHALL BE CLEAN AND POTABLE.

3.3.4. FLYASH: ASTM C618 CLASS C (CLASS F MAY BE ALLOWED IF APPROVED BY THE STRUCTURAL ENGINEER)

3.3.5. GROUND GRANULATED BLAST FURNACE SLAG (GGBFS): ASTM C989 GRADE 100 OR 120. GGBFS SHALL NOT BE PERMITTED UNLESS REVIEWED AND APPROVED BY THE STRUCTURAL ENGINEER. MIX DESIGNS SUBMITTED INCLUDING GGBFS SHALL INCLUDE SHRINKAGE TEST RESULTS AT 28 DAYS.

3.4. ADMIXTURES

3.4.1. WATER REDUCING ADMIXTURE: ASTM C494. ADMIXTURES SHALL BE USED IN EXACT ACCORDANCE WITH MANUFACTURER'S INSTRUCTIONS.

3.4.2. WATER REDUCING ADMIXTURES SHALL BE USED AT ALL HEAVILY CONGESTED AREAS (I.E. CONCRETE BEAMS, COLUMNS AND WALLS WITH REINFORCING SPACING OF 4" OR LESS)

3.4.3. CONCRETE USING ADMIXTURES TO PRODUCE FLOWABLE CONCRETE MAY BE USED SUBJECT TO ENGINEER'S APPROVAL.

3.4.4. AIR ENTRAINMENT: ASTM C260 AND ASTM C494 ENTRAIN 5% PLUS/MINUS 1.5% BY VOLUME IN ALL CONCRETE EXPOSED TO WEATHER.

3.4.5. NO OTHER ADMIXTURES PERMITTED UNLESS APPROVED BY THE ENGINEER.

3.5. FORMWORK AND SHORING

3.5.1. FOLLOW RECOMMENDED PRACTICE FOR CONCRETE FORMWORK (ACI-347).

3.6. REINFORCING STEEL:

3.6.1. DETAIL, FABRICATE, AND PLACE PER ACI-315 AND ACI-318. SUPPORT REINFORCEMENT WITH APPROVED CHAIRS, SPACERS, OR TIES.

3.6.2. DEFORMED BAR REINFORCEMENT: ASTM A615 GR 60

3.6.3. WELDABLE DEFORMED BAR REINFORCEMENT: ASTM A706 GR 60 WHERE NOTED ON STRUCTURAL DRAWINGS

3.6.4. WELDED WIRE FABRIC: ASTM 1064 GR 65

3.6.5. DEFORMED BAR ANCHORS: ASTM A496

3.6.6. HEADED SHEAR STUD REINFORCEMENT: ASTM A1044

3.6.7. EXCEPT AS NOTED SPECIFICALLY ON THE DRAWINGS, ALL CONCRETE REINFORCEMENT SHALL BE LAP-SPLICED AS FOLLOWS:

#6 AND SMALLER 48 X BAR DIAMETER
#7 AND LARGER 56 X BAR DIAMETER

NO MORE THAN 50% HORIZONTAL OR VERTICAL BARS SHALL BE SPLICED AT ONE LOCATION

3.6.8. EXCEPT AS NOTED SPECIFICALLY ON THE DRAWINGS, PROVIDE CORNER BARS TO MATCH QUANTITY AND DIAMETER OF HORIZONTAL REINFORCEMENT AND LAP WITH HORIZONTAL REINFORCEMENT AS FOLLOWS:

#6 AND SMALLER 48 X BAR DIAMETER
#7 AND LARGER 56 X BAR DIAMETER

THESE CORNER BARS SHALL BE PLACED AT ALL CORNERS AND INTERSECTIONS IN CONCRETE FOOTINGS AND WALLS.

3.6.9. LAP WELDED WIRE FABRIC 12" OR ONE SPACING PLUS 2", WHICHEVER IS MORE.

3.7. CONCRETE COVER ON REINFORCING SHALL BE AS FOLLOWS (UNLESS SHOWN OTHERWISE):

BOTTOM OF FOOTINGS	3"
FORMED EARTH FACE AND SLAB ON GRADE	2"
WALLS, WEATHER FACE	1-1/2"
WALLS, INSIDE FACE	1"

3.8. CONSTRUCTION OR CONTROL JOINTS

3.8.1. UNLESS NOTED OTHERWISE, LOCATION OF THE CONSTRUCTION OR CONTROL JOINTS IN SLAB ON GRADE SHALL NOT EXCEED THE DISTANCES NOTED BELOW. JOINTS SHALL BE LOCATED ON COLUMN GRIDS OR UNDER PERMANENT PARTITIONS TO THE GREATEST EXTENT POSSIBLE. ADDITIONAL JOINTS SHALL BE REQUIRED AT REENTRANT CORNERS AND CORNERS OF SLAB DEPRESSIONS OR PENETRATIONS. SEE ARCHITECTURAL DRAWINGS FOR JOINT LAYOUT AT EXPOSED CONCRETE CONDITIONS. PROVIDE JOINT SEALANT PER SPECIFICATIONS - INSTALL PER MANUFACTURER RECOMMENDATIONS.

5" SLAB ON GRADE 15'-0" OC

3.9. CONDUIT AND PIPING EMBEDDED IN CONCRETE

3.9.1. ELECTRICAL CONDUIT SHALL NOT BE PLACED WITHIN A SLAB ON GRADE BUT PLACED BELOW THE SLAB IN THE SUB-BASE.

3.10. GROUT FOR BEARING PLATES

THE NON-SHRINK GROUT SHALL MEET ASTM C1107 GRADE B OR EQUIVALENT (MASTERFLOW 928 BY BASF OR APPROVED EQUIVALENT). GROUT SHALL BE A PRE-PACKAGED HYDRAULIC CEMENT BASED MINERAL AGGREGATE GROUT, MIXED, PLACED AND CURED AS RECOMMENDED BY THE MANUFACTURER. COMPRESSIVE STRENGTH SHALL EXCEED 6000 PSI AT 28 DAYS.

3.11. ADHESIVE EXPANSIVE WATERSTOPS

ADHESIVE EXPANSIVE WATERSTOP SHALL BE VOLCLAY WATERSTOP-RX (AS MANUFACTURED BY CETCO), SWELLSTOP OR HYDROTIGHT (GREENSTREAK), OR APPROVED EQUIVALENT. INSTALL PER MANUFACTURER'S RECOMMENDATIONS.

4. MASONRY

4.1. MORTAR

CMU:

ASTM C270, TYPE S, f'_c = 1800 PSI AT 28 DAYS, OR
ASTM C270, TYPE M, f'_c = 2500 PSI AT 28 DAYS.

BRICK VENEER:

ASTM C270, TYPE N, f'_c = 750 PSI AT 28 DAYS.

4.2. ANCHORED MASONRY VENEER (BRICK, CMU OR STONE UNITS)

4.2.1. MATERIALS: SEE ARCHITECTURAL DRAWINGS AND PROJECT SPECIFICATIONS.

4.2.2. INSTALL PER IBC SECTION 1405 AND ACI 530. ANCHORS, SUPPORTS AND TIES SHALL BE NONCOMBUSTIBLE AND CORROSION RESISTANT AND SHALL BE DESIGNED TO RESIST A HORIZONTAL FORCE EQUAL TO AT LEAST TWICE THE WEIGHT OF THE VENEER.

4.2.3. MASONRY VENEER AND TIES (5" MAXIMUM IN THICKNESS)

A. MASONRY AND STONE VENEER NOT EXCEEDING 5" IN THICKNESS SHALL BE ANCHORED DIRECTLY TO STRUCTURAL MASONRY, CONCRETE OR STUDS.
B. WALL TIES SHALL BE SPACED SO AS TO SUPPORT NOT MORE THAN 2 SQUARE FEET OF WALL AREA BUT SHALL NOT BE MORE THAN 24 INCHES ON CENTER HORIZONTALLY.
C. CORRUGATED SHEET METAL TIES SHALL NOT BE PERMITTED FOR VENEER TALLER THAN 8 FEET. FOR VENEER TALLER THAN 8 FEET, ADJUSTABLE ANCHORS WITH MINIMUM CLEARANCE BETWEEN PARTS OF 1/16 INCH AND DETAILED TO PREVENT DISENGAGEMENT SHALL BE USED. WALL TIES SHALL BE CORROSION RESISTANT.
D. CORRUGATED SHEET METAL ANCHORS SHALL BE AT LEAST 7/8" WIDE WITH A BASE METAL THICKNESS OF 0.03 INCHES AND SHALL HAVE CORRUGATIONS WITH A WAVELENGTH OF 0.3-0.5 INCHES AND AN AMPLITUDE OF 0.06-0.10 INCHES.
E. SHEET METAL ANCHORS SHALL BE AT LEAST 7/8" WIDE WITH A BASE METAL THICKNESS OF 0.06 INCHES AND SHALL BE BENT, NOTCHED, OR PUNCHED TO PROVIDE ADEQUATE PULL-OUT OR PUSH-THROUGH PERFORMANCE.
F. WIRE ANCHORS SHALL BE AT LEAST WIRE SIZE W1.7 (0.148 INCH DIAMETER) AND SHALL HAVE ENDS BENT TO FORM AN EXTENSION FROM THE BEND OF AT LEAST 2 INCHES.
G. PINTLE ANCHORS SHALL HAVE ONE OR MORE PINTLE LEGS OF WIRE SIZE W2.8 (0.189 INCH DIAMETER) AND AN OFFSET NOT EXCEEDING 1 1/4".
H. WIRE COMPONENTS OF ANCHORS OR JOINT REINFORCING SHALL NOT HAVE DRIP BENDS.
I. WALL TIES SHALL HAVE A LIP OR HOOK ON THE EXTENDED LEG THAT WILL ENGAGE OR ENCLOSE A HORIZONTAL W1.4 (0.148 INCH DIAMETER) JOINT REINFORCEMENT WIRE. THE JOINT REINFORCEMENT SHALL BE CONTINUOUS WITH BUTT SPLICES BETWEEN TIES PERMITTED.
J. WALL TIE ASSEMBLIES SHALL BE BY HOHMANN BARNARD OR APPROVED EQUIVALENT. CONTRACTOR SHALL SUBMIT TO ENGINEER FOR APPROVAL OF PROPOSED WALL TIE SYSTEM (INCLUDING ANCHORAGE DETAILS).

5. METALS

5.1. STRUCTURAL STEEL GENERAL REQUIREMENTS

5.1.1. ALL DETAILING, FABRICATION, AND ERECTION SHALL CONFORM TO AISC 360-16 "SPECIFICATION FOR STRUCTURAL STEEL BUILDINGS", AISC 341-16 "SEISMIC PROVISIONS FOR STRUCTURAL STEEL BUILDINGS" AND AISC 303-16 "CODE OF STANDARD PRACTICE FOR STEEL BUILDINGS AND BRIDGES" EXCEPT AS AMENDED BY THESE STRUCTURAL NOTES.

5.1.2. STRUCTURAL STEEL DETAILING REQUIREMENTS:

A. THE STRUCTURAL STEEL DETAILER SHALL HAVE A MINIMUM OF 3 YEARS OF DETAILING EXPERIENCE OF PROJECTS OF SIMILAR SIZE AND COMPLEXITY, AS WELL AS A MINIMUM OF 5 REFERENCE PROJECTS OF SIMILAR SIZE AND COMPLEXITY TO THIS PROJECT. PRIOR TO START OF DETAILING, THE STRUCTURAL STEEL DETAILER SHALL SUBMIT QUALIFICATIONS AND REFERENCE PROJECTS TO THE ARCHITECT AND STRUCTURAL ENGINEER OF RECORD FOR REVIEW AND APPROVAL. IT SHALL BE THE RESPONSIBILITY OF THE GENERAL CONTRACTOR TO ENSURE THAT SUBMITTALS HAVE BEEN REVIEWED AND APPROVED PRIOR TO THE START OF DETAILING. NONCOMPLIANCE WITH THESE REQUIREMENTS MAY BE CAUSE FOR DISQUALIFICATION OF THE STRUCTURAL STEEL DETAILER.
B. THE DELIVERABLES BY THE STRUCTURAL STEEL DETAILER SHALL INCLUDE A COMPREHENSIVE THREE-DIMENSIONAL COMPUTER MODEL OF THE PRIMARY STRUCTURAL STEEL FRAME. THIS MODEL SHALL BE MADE AVAILABLE TO THE ARCHITECT AND STRUCTURAL ENGINEER OF RECORD AT THEIR REQUEST.
C. REVISIONS OR MODIFICATIONS TO THE STRUCTURAL FRAMING BY THE STRUCTURAL STEEL DETAILER SHALL NOT BE PERMITTED WITHOUT PRIOR REVIEW AND APPROVAL OF THE STRUCTURAL ENGINEER OF RECORD. ANY STRUCTURAL STEEL FRAMING MEMBER OR CONNECTION MODIFICATIONS MADE WITHOUT PRIOR APPROVAL MAY BE SUBJECT TO REJECTION AND RE-FABRICATION AT THE DISCRETION OF THE STRUCTURAL ENGINEER AND AT NO COST TO THE OWNER.

5.1.3. STRUCTURAL STEEL FABRICATOR REQUIREMENTS:

A. THE STRUCTURAL STEEL FABRICATOR SHALL BE CURRENTLY AISC CERTIFIED, CATEGORY STD.
B. THE STRUCTURAL STEEL FABRICATOR SHALL HAVE A MINIMUM OF 5 YEARS OF DETAILING EXPERIENCE OF PROJECTS OF SIMILAR SIZE AND COMPLEXITY, AS WELL AS A MINIMUM OF 5 REFERENCE PROJECTS OF SIMILAR SIZE AND COMPLEXITY TO THIS PROJECT. PRIOR TO START OF FABRICATION, THE STRUCTURAL STEEL FABRICATOR SHALL SUBMIT QUALIFICATIONS AND REFERENCE PROJECTS TO THE ARCHITECT AND STRUCTURAL ENGINEER OF RECORD FOR REVIEW AND APPROVAL. IT SHALL BE THE RESPONSIBILITY OF THE GENERAL CONTRACTOR TO ENSURE THAT SUBMITTALS HAVE BEEN REVIEWED AND APPROVED PRIOR TO THE START OF FABRICATION.
C. PRIOR TO THE START OF FABRICATION, THE STRUCTURAL STEEL FABRICATOR SHALL SUBMIT IN WRITING THE FABRICATOR'S PROJECT SPECIFIC QUALITY CONTROL/QUALITY ASSURANCE PLAN. AT A MINIMUM THE QC/QA PLAN SHALL COMPLY WITH CHAPTER N OF AISC 360-16 "SPECIFICATION FOR STRUCTURAL STEEL BUILDINGS," AND INCLUDE THE FOLLOWING:
   a. THE QC/QA PLAN SHALL COMPLY WITH CHAPTER 17 OF THE IBC AND THE STATEMENT OF SPECIAL INSPECTION AND TESTING CONTAINED WITHIN THESE DRAWINGS.
   b. THE QC/QA PLAN SHALL INDICATE THE FABRICATOR'S PERSONNEL THAT SERVE AS THE FABRICATOR'S QUALITY CONTROL INSPECTOR (QCI) AND THEIR LIST OF QUALIFICATIONS. THE QCI SHALL BE A DESIGNATED COMPETENT PERSON NOT INVOLVED IN THE MATERIAL FABRICATION OF STRUCTURAL STEEL ON THIS PROJECT.
   c. THE QC/QA PLAN SHALL INDICATE IN-HOUSE PROCESSES FOR IDENTIFYING NON-COMPLIANCE WITH CONTRACT REQUIREMENTS, AS WELL AS TRACKING AND COMPLETING NECESSARY REPAIRS.

Helix design group

AMERICAN INSTITUTE OF ARCHITECTS

ANDREW DEAN McEACHRAN · STATE OF WASHINGTON · STRUCTURAL · PROFESSIONAL ENGINEER

HELIX DESIGN GROUP, INC

AHBL
TACOMA · SEATTLE · SPOKANE · TRI-CITIES
253.383.2422 TEL 253.383.2572 FAX www.ahbl.com WEB
2215 North 30th Street, Suite 300 Tacoma, WA 98403

STRUCTURAL NOTES

CITY OF FEDERAL WAY FLEET & SHOP BUILDING

FEDERAL WAY, WASHINGTON

REVISION	DATE

DATE	JOB NO.
05.06.24	a23-087

BID SET

SB001

DRAWING NO.

©HELIX DESIGN GROUP, INC.: All rights reserved. No part of this document may be reproduced in any form or by any means without permission in writing from Helix Design Group.

UNOFFICIAL COPY Official bid documents, plan holder's list, and addenda (if applicable) are available on BXWA.com

PLOTTED: 5/10/2024 5:35:33 PM PROJECT: a23-087 - CITY OF FEDERAL WAY
FILE PATH: C:\Users\kgysler\Documents\2200572-STRUCT-R22-Bldg B_kgysler2FSQ3.rvt

D. IF THE FABRICATOR'S QC/QA PLAN IS DETERMINED TO BE NON-COMPLIANT WITH THE PROJECT REQUIREMENTS, ADDITIONAL INSPECTIONS MAY BE REQUIRED BY THE PROJECT SPECIAL INSPECTOR EMPLOYED BY THE PROJECT OWNER. THE COSTS ASSOCIATED WITH THESE ADDITIONAL INSPECTIONS SHALL BE BORNE BY THE GENERAL CONTRACTOR AND STRUCTURAL STEEL FABRICATOR.

5.1.4. STRUCTURAL STEEL ERECTOR REQUIREMENTS:

A. THE STRUCTURAL STEEL ERECTOR SHALL HAVE A MINIMUM OF 5 YEARS OF ERECTION EXPERIENCE OF PROJECTS OF SIMILAR SIZE AND COMPLEXITY, AS WELL AS A MINIMUM OF 5 REFERENCE PROJECTS OF SIMILAR SIZE AND COMPLEXITY TO THIS PROJECT. PRIOR TO START OF ERECTION, THE STRUCTURAL STEEL ERECTOR SHALL SUBMIT QUALIFICATIONS AND REFERENCE PROJECTS TO THE ARCHITECT AND STRUCTURAL ENGINEER OF RECORD FOR REVIEW AND APPROVAL. IT SHALL BE THE RESPONSIBILITY OF THE GENERAL CONTRACTOR TO ENSURE THAT SUBMITTALS HAVE BEEN REVIEWED AND APPROVED PRIOR TO THE START OF ERECTION.

B. PRIOR TO THE START OF ERECTION, THE STRUCTURAL STEEL ERECTOR SHALL SUBMIT IN WRITING THE ERECTOR'S PROJECT SPECIFIC QUALITY CONTROL/QUALITY ASSURANCE PLAN. AT A MINIMUM THE QC/QA PLAN SHALL COMPLY WITH CHAPTER N OF AISC 360-10 "SPECIFICATION FOR STRUCTURAL STEEL BUILDINGS," AND INCLUDE THE FOLLOWING:

a. THE QC/QA PLAN SHALL COMPLY WITH CHAPTER 17 OF THE IBC AND THE STATEMENT OF SPECIAL INSPECTION AND TESTING CONTAINED WITHIN THESE DRAWINGS.

b. THE QC/QA PLAN SHALL INDICATE THE ERECTOR'S PROCESSES FOR IDENTIFYING NON-COMPLIANCE WITH CONTRACT REQUIREMENTS, AS WELL AS TRACKING AND COMPLETING NECESSARY REPAIRS.

C. THE GENERAL CONTRACTOR AND STRUCTURAL STEEL ERECTOR SHALL BE RESPONSIBLE FOR COORDINATING SITE INSPECTIONS BY THE PROJECT SPECIAL INSPECTOR EMPLOYED BY THE OWNER. ANY ERECTION WORK PERFORMED WITHOUT THE REQUIRED SPECIAL INSPECTIONS SHALL BE REJECTED, AND THE COST OF RE-FABRICATION OR FABRICATION VERIFICATION BY THE SPECIAL INSPECTOR SHALL BE BORNE BY THE GENERAL CONTRACTOR AND STRUCTURAL STEEL ERECTOR.

D. ANY WORK PERFORMED BY THE ERECTOR PRIOR TO REVIEW AND APPROVAL OF THE ERECTOR'S QUALIFICATIONS AND QC/QA PLAN MAY BE SUBJECT TO REJECTION AT THE DISCRETION OF THE STRUCTURAL ENGINEER.

5.2. STRUCTURAL STEEL

5.2.1. STEEL W SHAPES AND C & MC SHAPES 8" OR LARGER SHALL BE ASTM A992 (F_y=50 KSI).

5.2.2. STEEL M, S, HP AND L SHAPES SHALL BE ASTM A572 Gr. 50 (F_y=50 KSI).

5.2.3. STEEL PLATES THAT ARE PART OF THE SEISMIC FORCE RESISTING SYSTEM SHALL BE ASTM A572 Gr. 50 (F_y=50 KSI).

5.2.4. OTHER STEEL PLATES AND C & MC SHAPES SMALLER THAN 8" SHALL BE ASTM A36 (F_y=36 KSI).

5.2.5. STEEL PIPE SECTIONS (PIPE) SHALL BE ASTM A53 Gr. B (F_y=35 KSI).

5.2.6. RECTANGULAR AND ROUND HOLLOW STEEL SECTIONS (HSS) OR TUBE STEEL SECTIONS (TS) SHALL BE ASTM A500, GR. C (F_y=50 KSI).

5.2.7. STRUCTURAL TEES SHALL BE CUT FROM W, M OR S SHAPES TO MAKE WT, MT AND ST SHAPES.

5.2.8. BOLTS

A. MACHINE BOLTS NOT SPECIFIED AS HIGH STRENGTH SHALL BE ASTM A307 GRADE A.

B. HIGH STRENGTH BOLTS SHALL BE ASTM F3125 GRADE A325 OR GRADE A490 AS INDICATED ON STRUCTURAL DRAWINGS. ALL BOLTS SHALL BE CONSIDERED BEARING TYPE WITH THREADS INCLUDED IN SHEAR PLANE (CONNECTION TYPE N) UNLESS NOTED OTHERWISE. ALL HIGH STRENGTH BOLTED CONNECTIONS SHALL BE INSTALLED WITH NUTS CONFORMING TO ASTM A563 AND HARDENED WASHERS CONFORMING TO ASTM F436.

C. HIGH STRENGTH BOLTS WITH TWIST OFF TYPE TENSION CONTROL MAY BE SUBSTITUTED FOR CONVENTIONAL BOLTS AND SHALL BE ASTM F3125 GRADE F1852 OR GRADE F2280, AND MAY BE USED FOR GRADE A325 OR GRADE A490 RESPECTIVELY.

D. ALL HIGH STRENGTH BOLTS SHALL BE INSTALLED PER THE SPECIFICATION FOR STRUCTURAL JOINTS USING HIGH-STRENGTH BOLTS (LATEST EDITION) BY THE RESEARCH COUNCIL ON STRUCTURAL CONNECTIONS (WWW.BOLTCOUNCIL.ORG).

5.2.9. STEEL ANCHORAGE ELEMENTS:

A. THREADED RODS SHALL BE ALL-THREAD ASTM A36 (F_y=36 KSI) UNLESS NOTED OTHERWISE.

B. WELDED HEADED STUDS: "NELSON STUDS" SHALL BE BY NELSON STUD WELDING, INC. OR APPROVED EQUIVALENT COMPLYING WITH ASTM A108. STUDS SHALL HAVE A MINIMUM F_y OF 65 KSI.

C. ANCHOR RODS: ANCHOR RODS SHALL BE ASTM F1554, F_y=36 KSI WITH HOOKED, HEADED OR THREADED AND NUTTED ENDS AS INDICATED. AT COLUMN LOCATIONS ANCHOR RODS SHALL BE ASTM F1554, F_y=36 KSI WITH HEADED OR THREADED/NUTTED END. TACK WELD NUT TO ANCHOR ROD UNLESS NOTED OTHERWISE. WHERE NOTED, HIGH STRENGTH ANCHOR RODS SHALL BE ASTM F1554, F_y=105 KSI WITH DOUBLE NUTTED PLATE WASHER.

D. EXPANSION ANCHORS SHALL BE CARBON STEEL AS NOTED IN THE FOLLOWING TABLE. ANCHORS IN CONCRETE SHALL HAVE BEEN TESTED IN ACCORDANCE WITH ACI 355.2 AND/OR ICC-ES AC193 FOR CRACKED CONCRETE AND SEISMIC APPLICATIONS. ANCHORS SHALL HAVE A CURRENT CODE REPORT THAT COMPLIES WITH THE CURRENT EDITION OF THE IBC AND SHALL BE RATED FOR USE IN THE SEISMIC DESIGN CATEGORY NOTED IN THE DESIGN CRITERIA SECTION OF THESE NOTES.

EXPANSION ANCHORS IN CONCRETE	CODE REPORT
HILTI KWIK BOLT TZ	ICC ESR-1917
SIMPSON STRONG-BOLT 2	ICC ESR-3037
DEWALT POWER-STUD+ SD2	ICC ESR-2502

D. IF THE FABRICATOR'S QC/QA PLAN IS DETERMINED TO BE NON-COMPLIANT WITH THE PROJECT REQUIREMENTS, ADDITIONAL INSPECTIONS MAY BE REQUIRED BY THE PROJECT SPECIAL INSPECTOR EMPLOYED BY THE PROJECT OWNER. THE COSTS ASSOCIATED WITH THESE ADDITIONAL INSPECTIONS SHALL BE BORNE BY THE GENERAL CONTRACTOR AND STRUCTURAL STEEL FABRICATOR.

5.1.4. STRUCTURAL STEEL ERECTOR REQUIREMENTS:

A. THE STRUCTURAL STEEL ERECTOR SHALL HAVE A MINIMUM OF 5 YEARS OF ERECTION EXPERIENCE OF PROJECTS OF SIMILAR SIZE AND COMPLEXITY, AS WELL AS A MINIMUM OF 5 REFERENCE PROJECTS OF SIMILAR SIZE AND COMPLEXITY TO THIS PROJECT. PRIOR TO START OF ERECTION, THE STRUCTURAL STEEL ERECTOR SHALL SUBMIT QUALIFICATIONS AND REFERENCE PROJECTS TO THE ARCHITECT AND STRUCTURAL ENGINEER OF RECORD FOR REVIEW AND APPROVAL. IT SHALL BE THE RESPONSIBILITY OF THE GENERAL CONTRACTOR TO ENSURE THAT SUBMITTALS HAVE BEEN REVIEWED AND APPROVED PRIOR TO THE START OF ERECTION.

B. PRIOR TO THE START OF ERECTION, THE STRUCTURAL STEEL ERECTOR SHALL SUBMIT IN WRITING THE ERECTOR'S PROJECT SPECIFIC QUALITY CONTROL/QUALITY ASSURANCE PLAN. AT A MINIMUM THE QC/QA PLAN SHALL COMPLY WITH CHAPTER N OF AISC 360-10 "SPECIFICATION FOR STRUCTURAL STEEL BUILDINGS," AND INCLUDE THE FOLLOWING:

a. THE QC/QA PLAN SHALL COMPLY WITH CHAPTER 17 OF THE IBC AND THE STATEMENT OF SPECIAL INSPECTION AND TESTING CONTAINED WITHIN THESE DRAWINGS.

b. THE QC/QA PLAN SHALL INDICATE THE ERECTOR'S PROCESSES FOR IDENTIFYING NON-COMPLIANCE WITH CONTRACT REQUIREMENTS, AS WELL AS TRACKING AND COMPLETING NECESSARY REPAIRS.

C. THE GENERAL CONTRACTOR AND STRUCTURAL STEEL ERECTOR SHALL BE RESPONSIBLE FOR COORDINATING SITE INSPECTIONS BY THE PROJECT SPECIAL INSPECTOR EMPLOYED BY THE OWNER. ANY ERECTION WORK PERFORMED WITHOUT THE REQUIRED SPECIAL INSPECTIONS SHALL BE REJECTED, AND THE COST OF RE-FABRICATION OR FABRICATION VERIFICATION BY THE SPECIAL INSPECTOR SHALL BE BORNE BY THE GENERAL CONTRACTOR AND STRUCTURAL STEEL ERECTOR.

D. ANY WORK PERFORMED BY THE ERECTOR PRIOR TO REVIEW AND APPROVAL OF THE ERECTOR'S QUALIFICATIONS AND QC/QA PLAN MAY BE SUBJECT TO REJECTION AT THE DISCRETION OF THE STRUCTURAL ENGINEER.

5.2. STRUCTURAL STEEL

5.2.1. STEEL W SHAPES AND C & MC SHAPES 8" OR LARGER SHALL BE ASTM A992 (F_y=50 KSI).

5.2.2. STEEL M, S, HP AND L SHAPES SHALL BE ASTM A572 Gr. 50 (F_y=50 KSI).

5.2.3. STEEL PLATES THAT ARE PART OF THE SEISMIC FORCE RESISTING SYSTEM SHALL BE ASTM A572 Gr. 50 (F_y=50 KSI).

5.2.4. OTHER STEEL PLATES AND C & MC SHAPES SMALLER THAN 8" SHALL BE ASTM A36 (F_y=36 KSI).

5.2.5. STEEL PIPE SECTIONS (PIPE) SHALL BE ASTM A53 Gr. B (F_y=35 KSI).

5.2.6. RECTANGULAR AND ROUND HOLLOW STEEL SECTIONS (HSS) OR TUBE STEEL SECTIONS (TS) SHALL BE ASTM A500, GR. C (F_y=50 KSI).

5.2.7. STRUCTURAL TEES SHALL BE CUT FROM W, M OR S SHAPES TO MAKE WT, MT AND ST SHAPES.

5.2.8. BOLTS

A. MACHINE BOLTS NOT SPECIFIED AS HIGH STRENGTH SHALL BE ASTM A307 GRADE A.

B. HIGH STRENGTH BOLTS SHALL BE ASTM F3125 GRADE A325 OR GRADE A490 AS INDICATED ON STRUCTURAL DRAWINGS. ALL BOLTS SHALL BE CONSIDERED BEARING TYPE WITH THREADS INCLUDED IN SHEAR PLANE (CONNECTION TYPE N) UNLESS NOTED OTHERWISE. ALL HIGH STRENGTH BOLTED CONNECTIONS SHALL BE INSTALLED WITH NUTS CONFORMING TO ASTM A563 AND HARDENED WASHERS CONFORMING TO ASTM F436.

C. HIGH STRENGTH BOLTS WITH TWIST OFF TYPE TENSION CONTROL MAY BE SUBSTITUTED FOR CONVENTIONAL BOLTS AND SHALL BE ASTM F3125 GRADE F1852 OR GRADE F2280, AND MAY BE USED FOR GRADE A325 OR GRADE A490 RESPECTIVELY.

D. ALL HIGH STRENGTH BOLTS SHALL BE INSTALLED PER THE SPECIFICATION FOR STRUCTURAL JOINTS USING HIGH-STRENGTH BOLTS (LATEST EDITION) BY THE RESEARCH COUNCIL ON STRUCTURAL CONNECTIONS (WWW.BOLTCOUNCIL.ORG).

5.2.9. STEEL ANCHORAGE ELEMENTS:

A. THREADED RODS SHALL BE ALL-THREAD ASTM A36 (F_y=36 KSI) UNLESS NOTED OTHERWISE.

B. WELDED HEADED STUDS: "NELSON STUDS" SHALL BE BY NELSON STUD WELDING, INC. OR APPROVED EQUIVALENT COMPLYING WITH ASTM A108. STUDS SHALL HAVE A MINIMUM F_y OF 65 KSI.

C. ANCHOR RODS: ANCHOR RODS SHALL BE ASTM F1554, F_y=36 KSI WITH HOOKED, HEADED OR THREADED AND NUTTED ENDS AS INDICATED. AT COLUMN LOCATIONS ANCHOR RODS SHALL BE ASTM F1554, F_y=36 KSI WITH HEADED OR THREADED/NUTTED END. TACK WELD NUT TO ANCHOR ROD UNLESS NOTED OTHERWISE. WHERE NOTED, HIGH STRENGTH ANCHOR RODS SHALL BE ASTM F1554, F_y=105 KSI WITH DOUBLE NUTTED PLATE WASHER.

D. EXPANSION ANCHORS SHALL BE CARBON STEEL AS NOTED IN THE FOLLOWING TABLE. ANCHORS IN CONCRETE SHALL HAVE BEEN TESTED IN ACCORDANCE WITH ACI 355.2 AND/OR ICC-ES AC193 FOR CRACKED CONCRETE AND SEISMIC APPLICATIONS. ANCHORS SHALL HAVE A CURRENT CODE REPORT THAT COMPLIES WITH THE CURRENT EDITION OF THE IBC AND SHALL BE RATED FOR USE IN THE SEISMIC DESIGN CATEGORY NOTED IN THE DESIGN CRITERIA SECTION OF THESE NOTES.

EXPANSION ANCHORS IN CONCRETE	CODE REPORT
HILTI KWIK BOLT TZ	ICC ESR-1917
SIMPSON STRONG-BOLT 2	ICC ESR-3037
DEWALT POWER-STUD+ SD2	ICC ESR-2502

E. HEAVY DUTY CONCRETE/MASONRY SCREW ANCHORS SHALL BE USED IN DRY INTERIOR CONDITIONS AND SHALL BE AS NOTED IN THE FOLLOWING TABLE:

HEAVY DUTY CONCRETE/ MASONRY SCREW ANCHORS	CODE REPORT
HILTI KWIK HUS-EZ	ICC ESR-3027(CONC) ICC ESR-3056 (CMU)
SIMPSON TITEN HD	ICC ESR-2713 (CONC) ICC ESR-1056 (CMU)
DEWALT SCREW BOLT+	ICC ESR-3889 (CONC) ICC ESR-4042 (CMU)

F. ADHESIVE ANCHORS SHALL BE THREADED ANCHOR RODS OR REBAR DOWELS USING AN INJECTABLE ADHESIVE AS NOTED IN THE FOLLOWING TABLE. ANCHORS IN CONCRETE SHALL HAVE BEEN TESTED IN ACCORDANCE WITH ACI 355.4 AND/OR ICC-ES AC-308 FOR CRACKED CONCRETE AND SEISMIC APPLICATIONS. ANCHORS SHALL HAVE A CURRENT CODE REPORT THAT COMPLIES WITH THE CURRENT EDITION OF THE IBC AND SHALL BE RATED FOR USE IN THE SEISMIC DESIGN CATEGORY NOTED IN THE DESIGN CRITERIA SECTION OF THESE NOTES.

ADHESIVE ANCHORS IN CONCRETE (1) (2)	CODE REPORT
HILTI HIT HY-200 SAFE SET	ICC ESR-3187
SIMPSON AT-XP (3)	IAPMO ER-263
DEWALT AC200+ DUST-X	ICC ESR-4027

(1) ADHESIVE ANCHORS INSTALLED IN HORIZONTAL TO VERTICALLY OVERHEAD ORIENTATION TO SUPPORT SUSTAINED TENSION LOADS SHALL BE DONE BY A CERTIFIED ADHESIVE ANCHOR INSTALLER (AAI) AS CERTIFIED THROUGH ACI/CRSI, OR AN APPROVED ALTERNATE WHEN SUBMITTED AND APPROVED BY THE ENGINEER. PROOF OF CURRENT CERTIFICATION SHALL BE SUBMITTED TO THE ENGINEER FOR APPROVAL PRIOR TO COMMENCEMENT OF INSTALLATION.

(2) ADHESIVE ANCHORS MUST BE INSTALLED IN CONCRETE AGED A MINIMUM OF 21 DAYS.

(3) SIMPSON SET-XP MAY BE USED WHERE BASE MATERIAL TEMPERATURE IS ABOVE 50 DEGREES FAHRENHEIT OR FOR EMBEDMENT GREATER THAN 12-INCHES FOR LONGER GEL TIME. SEE ICC ESR-2508 (CONC) AND IAPMO ER-265 (MASONRY).

G. POWDER ACTUATED FASTENERS: PDF'S OR FAF'S SHALL BE A MINIMUM 0.157" DIA KNURLED SHANK FASTENER AS NOTED IN THE FOLLOWING TABLE, UNLESS NOTED OTHERWISE. FASTENERS DRIVEN INTO STEEL SHALL BE DRIVEN SO THAT THE POINT OF THE FASTENER COMPLETELY PENETRATES THE STEEL BASE MATERIAL. AT TOPPING SLABS, PT SLABS OR SLABS WITH RADIANT HEAT TUBES EMBEDDED WITHIN THE SLAB, LIMIT THE PDF PENETRATION TO 3/4" MAXIMUM AND COORDINATE WITH TENDON/TUBE PLACEMENT AND COVER.

POWDER ACTUATED FASTENERS	CODE REPORT
HILTI X-U	ICC ESR-2269
SIMPSON PDPA	ICC ESR-2138
DEWALT CSI PIN	ICC ESR-2024

H. CONCRETE/MASONRY SCREWS SHALL BE AS NOTED IN THE FOLLOWING TABLE:

CONCRETE/MASONRY SCREWS	CODE REPORT
HILTI KWIK CON II+	-
SIMPSON TITEN	-
DEWALT TAPPER+	ICC ESR-3068 (CONC) ICC ESR-3196 (MAS)

5.2.10. METAL PROTECTION: ALL STEEL EXPOSED TO WEATHER, MOISTURE, SOIL, OR AS NOTED SHALL BE GALVANIZED PER ASTM A123 OR A153 AS APPLICABLE. ALL OTHER STEEL SURFACES SHALL BE SHOP PRIMED AFTER FABRICATION.

REPAIR ALL DAMAGED AREAS OF GALVANIZED PARTS SUCH AS FIELD WELDS, ETC. APPLY REPAIR COATING THICKNESS GREATER THAN OR EQUAL TO ORIGINAL ZINC COATING THICKNESS.

5.2.11. STEEL COLUMNS: ALL VERTICAL LOAD CARRYING MEMBERS HAVE BEEN NOTED AS "COLUMNS" ON THE STRUCTURAL DRAWINGS. THIS NOTATION DOES NOT IDENTIFY THESE MEMBERS AS "POSTS" OR "COLUMNS" AS DEFINED BY THE LATEST OSHA RULES REGARDING COLUMN ANCHORAGE REQUIREMENTS (OSHA 29 CFR PARTS 1926.751 AND 1926.755). THE GENERAL CONTRACTOR, STEEL DETAILER, AND STEEL ERECTOR SHALL BE RESPONSIBLE TO DETERMINE THE CORRECT OSHA DESIGNATION OF EACH MEMBER REGARDLESS OF THE NOTATION SHOWN ON THE STRUCTURAL DRAWINGS.

5.2.12. WELDED MARK NUMBERS ON STRUCTURAL STEEL MEMBERS EXPOSED TO VIEW ARE UNACCEPTABLE AND SHALL NOT BE PERMITTED. ANY WELDED MARKS SHALL BE REMOVED AT THE CONTRACTOR'S EXPENSE. SEE ARCH SPECIFICATIONS FOR ADDITIONAL REQUIREMENTS.

5.2.13. WHERE NOTED ON THE ARCHITECTURAL/STRUCTURAL DRAWINGS, STRUCTURAL STEEL MEMBERS EXPOSED TO VIEW SHALL BE CONSIDERED "ARCHITECTURALLY EXPOSED STRUCTURAL STEEL" (AESS) AND SHALL REQUIRE ADDITIONAL CONSIDERATION AT ALL WELDS AND CONNECTIONS PER AISC REQUIREMENTS. SEE PROJECT SPECIFICATIONS FOR ADDITIONAL REQUIREMENTS.

5.6.6. LIMIT LIVE LOAD AND/OR SNOW LOAD DEFLECTION L/240 FOR ROOF FRAMING MEMBERS.

5.6.7. THE JOIST MANUFACTURER SHALL DESIGN THE JOISTS FOR UNIFORM LOADS INDICATED ON THE STRUCTURAL DRAWINGS AS WELL AS ALL SPECIAL LOADS NOTED ON THE STRUCTURAL PLANS AND DETAILS. SPECIAL LOADS SHALL INCLUDE POINT LOADS FOR SUPPORT OF SECONDARY FRAMING, OVERFRAMING AND SUPPORTED EQUIPMENT (MECHANICAL UNITS, SUSPENDED EQUIPMENT, ETC.).

5.6.8. THE JOIST MANUFACTURER SHALL COORDINATE JOIST BRIDGING AT EXPOSED LOCATIONS FOR ARCHITECTURAL APPEARANCE. BRIDGING LOCATIONS SHALL ALSO BE COORDINATED TO AVOID CONFLICTS WITH MECHANICAL DUCTWORK, SKYLIGHTS AND OTHER BUILDING SYSTEMS.

5.7. STEEL DECKING

5.7.1. ALL STEEL DECKING SHALL BE FORMED FROM STEEL SHEETS CONFORMING TO ASTM A653, F_y = 38 KSI, AS A MINIMUM. THE GALVANIZED COATING SHALL CONFORM TO ASTM A653, G-60 OR G-90 SPECIFICATIONS AS APPLICABLE.

5.7.2. ALL STEEL DECKING SHALL BE PLACED ON SUPPORTING FRAMEWORK WITH A MINIMUM END LAP OF TWO INCHES CENTERED OVER SUPPORTS. THE DECK SHALL BE ATTACHED TO SUPPORTS AND FASTENED AT SIDE LAPS PER THE DIAPHRAGM SCHEDULE.

5.7.3. DECKING SHALL BE AS MANUFACTURED BY ASC PROFILES, INC. OR EQUIVALENT. ALTERNATE MANUFACTURERS SHALL BE PERMITTED PROVIDED THE DECK MEETS OR EXCEEDS THE SECTION PROPERTIES OF THE SPECIFIED DECK AND THE ALLOWABLE SHEAR CAPACITY SPECIFIED IN THE DECK ATTACHMENT SCHEDULE.

5.7.4. CONTRACTOR SHALL BE RESPONSIBLE TO COORDINATE WITH ARCHITECTURAL DRAWINGS AND SPECIFICATIONS FOR ANY SPECIAL REQUIREMENTS.

5.7.5. CONTRACTOR SHALL INSTALL DECKING AS REQUIRED TO PREVENT MARRING/DAMAGING DECKING AT LOCATIONS EXPOSED TO VIEW FROM BELOW.

5.8. PRE-ENGINEERED FALL PROTECTION SYSTEM

5.8.1. THE FALL PROTECTION SYSTEM MANUFACTURER SHALL DESIGN THE FALL PROTECTION SYSTEM TO COMPLY WITH THE LATEST OSHA/WISHA REQUIREMENTS.

5.8.2. THE FALL PROTECTION SYSTEM MANUFACTURER SHALL SUBMIT SHOP DRAWINGS AND CALCULATIONS SEALED BY A PROFESSIONAL ENGINEER LICENSED IN THE STATE OF THE PROJECT.

5.8.3. THE GENERAL CONTRACTOR SHALL COORDINATE ANCHOR LOCATIONS AND REQUIRED LOADS WITH THE ARCHITECT/ ENGINEER AND ANY PRE-ENGINEERED FRAMING SYSTEM MANUFACTURERS WHOSE COMPONENTS SUPPORT THE FALL PROTECTION SYSTEM ANCHORS.

PLOTTED: 5/10/2024 5:35:34 PM PROJECT: a23-087 - CITY OF FEDERAL WAY
FILE PATH: C:\Users\kgysler\Documents\220057-2-STRUCT-R22-Bldg B_kgysler.rvt

UNOFFICIAL COPY Official bid documents, plan holder's list, and addenda (if applicable) are available on BXWA.com

Helix design group

AMERICAN INSTITUTE OF ARCHITECTS

HELIX DESIGN GROUP, INC

AHBL
TACOMA - SEATTLE - SPOKANE - TRI-CITIES
253.383.2422 TEL 253.383.2572 FAX www.ahbl.com WEB
2215 North 30th Street, Suite 300 Tacoma, WA 98403

STRUCTURAL NOTES

CITY OF FEDERAL WAY
FLEET & SHOP BUILDING

FEDERAL WAY, WASHINGTON

REVISION	DATE

DATE	JOB NO.
05.06.24	a23-087

BID SET

SB002

DRAWING NO.

© HELIX DESIGN GROUP, INC.: All rights reserved. No part of this document may be reproduced in any form or by any means without permission in writing from Helix Design Group.

11. STATEMENT OF SPECIAL INSPECTIONS

IBC	SI	SO	TITLE
1705.2	✓	✓	STEEL CONSTRUCTION (SEE TABLES 15A, 15B, 15C, AND 15D)
1705.3	✓	✓	CONCRETE CONSTRUCTION (SEE TABLE 13)
1705.4	✓	✓	MASONRY CONSTRUCTION (SEE TABLE 14A)
1705.6	✓	N/R	SOILS (SEE TABLE 12A)
1705.12.1 1705.13.1	✓	✓	STRUCTURAL STEEL - SEISMIC FORCE RESISTING SYSTEM
1705.12.5	✓	N/R	ARCHITECTURAL COMPONENTS (SEE TABLE 18)
1705.12.6	✓	N/R	PLUMBING, MECHANICAL AND ELECTRICAL COMPONENTS (SEE TABLE 18)
1705.12.7	✓	N/R	STORAGE RACKS (SEE TABLE 18)

SI = SPECIAL INSPECTION

SO = STRUCTURAL OBSERVATION

✓ = ITEM IS REQUIRED

N/R = ITEM IS NOT REQUIRED

SPECIAL INSPECTIONS INDICATED ARE FOR STRUCTURAL ELEMENTS ONLY. SEE ARCH, MECH, AND ELEC DRAWINGS FOR ADDITIONAL SPECIAL INSPECTIONS.

11.

11.1. INSPECTION/TESTING REQUIREMENTS:

SEE DRAWINGS, SPECIFICATIONS, AND IBC SECTIONS 110, AND CHAPTER 17.

11.2. INSPECTIONS BY THE BUILDING OFFICIAL (IBC SECTION 110):

11.2.1. FOOTING AND FOUNDATION INSPECTIONS SHALL BE MADE AFTER EXCAVATIONS ARE COMPLETE AND ANY REQUIRED REINFORCING IS IN PLACE. ANY REQUIRED FORMS SHALL BE IN PLACE PRIOR TO INSPECTION.

11.2.2. CONCRETE SLAB AND UNDER FLOOR INSPECTIONS SHALL BE MADE AFTER ALL IN SLAB OR UNDER FLOOR REINFORCING, CONDUIT, PIPING AND OTHER ANCILLARY EQUIPMENT ITEMS AND ACCESSORIES ARE IN PLACE BUT PRIOR TO CONCRETE PLACEMENT OR FLOOR SHEATHING INSTALLATION.

11.2.3. FRAMING INSPECTIONS SHALL BE MADE AFTER ALL SHEATHING, FRAMING, BLOCKING AND BRACING ARE COMPLETE AND ALL PIPES, DUCTS, ELECTRICAL, PLUMBING, ETC., ARE INSTALLED AND APPROVED PRIOR TO COVER.

11.2.4. IN ADDITION TO THE INSPECTIONS SPECIFIED ABOVE, THE BUILDING OFFICIAL IS AUTHORIZED TO MAKE OR REQUIRE OTHER INSPECTIONS OF ANY CONSTRUCTION WORK TO ASCERTAIN COMPLIANCE WITH THE PROVISIONS OF THE IBC OR OTHER LAWS ENFORCED BY THE BUILDING OFFICIAL.

11.3. STRUCTURAL TESTS AND SPECIAL INSPECTIONS (IBC CHAPTER 17):

11.3.1. SEE PROJECT SPECIFICATIONS FOR ADDITIONAL REQUIREMENTS.

11.3.2. STRUCTURAL TESTS AND SPECIAL INSPECTIONS SHALL BE PERFORMED IN ACCORDANCE WITH THE REQUIREMENTS OF CHAPTER 17 OF THE IBC AS WELL AS ANY ADDITIONAL REQUIREMENTS OF THE BUILDING OFFICIAL. OMISSION FROM THE LIST BELOW OF TESTING AND INSPECTION REQUIREMENTS SHALL NOT RELIEVE THE CONTRACTOR FROM PROVIDING TESTING AND INSPECTION REQUIRED BY THE SPECIFICATIONS, THE IBC AND THE BUILDING OFFICIAL.

11.3.3. TESTING AND SPECIAL INSPECTIONS SHALL BE COMPLETED IN ACCORDANCE WITH THE REQUIREMENTS OF CHAPTER 17 OF THE IBC FOR THE ITEMS LISTED IN THIS SECTION.

11.4. STRUCTURAL OBSERVATION

11.4.1. STRUCTURAL OBSERVATION SHALL BE PERFORMED DURING CONSTRUCTION IN A MANNER AS REQUIRED TO BECOME GENERALLY FAMILIAR WITH THE IN-PLACE CONSTRUCTION.

11.4.2. STRUCTURAL OBSERVATION EXTENT SHALL BE AS INDICATED ABOVE. TIMING AND DURATION OF OBSERVATIONS SHALL BE COORDINATED WITH THE GENERAL CONTRACTOR DURING CONSTRUCTION.

11.4.3. CONSTRUCTION OBSERVATION REPORTS AND FINDINGS SHALL NOT BE VIEWED AS A WARRANTY OR GUARANTEE BY THE STRUCTURAL ENGINEER.

11.5. SPECIAL INSPECTOR: SHALL BE CURRENTLY WABO CERTIFIED.

11.5.1. THE SPECIAL INSPECTOR SHALL OBSERVE THE WORK ASSIGNED FOR CONFORMANCE WITH THE APPROVED DESIGN DRAWINGS AND SPECIFICATIONS.

11.5.2. THE SPECIAL INSPECTOR SHALL FURNISH INSPECTION REPORTS TO THE BUILDING OFFICIAL, ENGINEER OF RECORD, ARCHITECT OF RECORD, AND OTHER DESIGNATED PERSONS. ALL DISCREPANCIES SHALL BE BROUGHT TO THE IMMEDIATE ATTENTION OF THE GENERAL CONTRACTOR FOR CORRECTION, THEN, IF NOT IN CONFORMANCE, TO THE PROPER DESIGN AUTHORITY AND BUILDING OFFICIAL.

11.5.3. THE SPECIAL INSPECTOR SHALL SUBMIT A FINAL REPORT STATING WHETHER THE WORK REQUIRING SPECIAL INSPECTION WAS IN CONFORMANCE WITH THE APPROVED PLANS AND SPECIFICATIONS AND THE APPLICABLE WORKMANSHIP PROVISIONS OF THE IBC.

12A. REQUIRED SPECIAL INSPECTIONS AND TEST OF SOILS

IBC TABLE 1705.6

SPECIAL INSPECTION OR TEST TYPE	CONTINUOUS SPECIAL INSPECTION	PERIODIC SPECIAL INSPECTION
1. VERIFY MATERIALS BELOW SHALLOW FOUNDATIONS ARE ADEQUATE TO ACHIEVE THE DESIGN BEARING CAPACITY	N/R	✓
2. VERIFY EXCAVATIONS ARE EXTENDED TO PROPER DEPTH AND HAVE REACHED PROPER MATERIAL	N/R	✓
3. PERFORM CLASSIFICATION AND TESTING OF COMPACTED FILL MATERIAL	N/R	✓
4. VERIFY USE OF PROPER MATERIALS, DENSITIES, AND LIFT THICKNESSES DURING PLACEMENT AND COMPACTION OF COMPACTED FILL	✓	N/R
5. PRIOR TO PLACEMENT OF COMPACTED FILL, INSPECT SUBGRADE AND VERIFY THAT SITE HAS BEEN PREPARED PROPERLY	N/R	✓

12.

12.1. SPECIAL INSPECTIONS AND TESTS FOR EXISTING SITE SOIL CONDITIONS, FILL PLACEMENT, AND LOAD-BEARING REQUIREMENTS PER IBC 1705.6., AS NOTED IN TABLE 12A.

12.1.1. THE APPROVED GEOTECHNICAL REPORT AND THE CONSTRUCTION DOCUMENTS PREPARED BY THE REGISTERED DESIGN PROFESSIONALS SHALL BE USED TO DETERMINE COMPLIANCE.

13. REQUIRED SPECIAL INSPECTIONS AND TESTS OF CONCRETE CONSTRUCTION

IBC TABLE 1705.3

	SPECIAL INSPECTION OR TEST TYPE	CONTINUOUS SPECIAL INSPECTION	PERIODIC SPECIAL INSPECTION	REFERENCED STANDARD	IBC REFERENCE
1.	INSPECT REINFORCEMENT, INCLUDING PRESTRESSING TENDONS, AND VERIFY PLACEMENT	N/R	✓	ACI 318: CH. 20, 25.2, 25.3, 26.6.1-26.6.3	1908.4
2.	REINFORCING BAR WELDING:				
A.	VERIFY WELDABILITY OF REINFORCING BARS OTHER THAN ASTM A706	N/R	✓	AWS D1.4 ACI 318:26.6.4	
B.	INSPECT SINGLE-PASS FILLET WELDS, MAXIMUM 5/16"	N/R	✓		
C.	INSPECT ALL OTHER WELDS	✓	N/R		
3.	INSPECT ANCHORS CAST IN CONCRETE	N/R	□	ACI 318: 17.8.2	
4.	INSPECTION OF ANCHORS POST-INSTALLED IN HARDENED CONCRETE MEMBERS				
A.	ADHESIVE ANCHORS INSTALLED IN HORIZONTALLY OR UPWARDLY INCLINED ORIENTATIONS TO RESIST SUSTAINED TENSION LOADS	✓	N/R	ACI 318: 17.8.2.4	
B.	MECHANICAL ANCHORS AND ADHESIVE ANCHORS NOT DEFINED IN 4A	N/R	✓	ACI 318: 17.8.2	
5.	VERIFY USE OF REQUIRED DESIGN MIX	N/R	✓	ACI 318: CH. 19, 26.4.3, 26.4.4	1904.1, 1904.2, 1908.2, 1908.3
6.	PRIOR TO CONCRETE PLACEMENT, FABRICATE SPECIMENS FOR STRENGTH TESTS, PERFORM SLUMP AND AIR CONTENT TESTS, AND DETERMINE THE TEMPERATURE OF THE CONCRETE	✓	N/R	ASTM C 172 ASTM C 31 ACI318:26.4, 26.12	1908.10
7.	INSPECT CONCRETE AND SHOTCRETE PLACEMENT FOR PROPER APPLICATION TECHNIQUES	✓	N/R	ACI 318: 26.5	1908.6, 1908.7, 1908.8
8.	VERIFY MAINTENANCE OF SPECIFIED CURING TEMPERATURE AND TECHNIQUES	N/R	✓	ACI 318: 26.5.3-26.5.5	1908.9
9.	INSPECT PRESTRESSED CONCRETE FOR:				
A.	APPLICATION OF PRESTRESSING FORCES	✓	N/R	ACI 318: 26.10	
B.	GROUTING OF BONDED PRESTRESSING TENDONS IN THE SEISMIC FORCE RESISTING SYSTEM	✓	N/R		
10.	INSPECT ERECTION OF PRECAST CONCRETE MEMBERS	N/R	✓	ACI 318: 26.9	
11.	VERIFY IN-SITU CONCRETE STRENGTH, PRIOR TO STRESSING OF TENDONS IN POST-TENSIONED CONCRETE AND PRIOR TO REMOVAL OF SHORES AND FORMS FROM BEAMS AND STRUCTURAL SLABS	N/R	✓	ACI 318: 26.10.2	
12.	INSPECT FORMWORK FOR SHAPE, LOCATION AND DIMENSIONS OF THE CONCRETE MEMBER BEING FORMED	N/R	✓	ACI 318: 26.11.1.2(b)	

13.

13.1. CONCRETE: SPECIAL INSPECTION AND TESTING PER IBC TABLE 1705.3 AS NOTED IN TABLE 13, INCLUDING:

13.1.1. CONTINUOUS SPECIAL INSPECTION OF CONCRETE PLACEMENT FOR PROPER APPLICATION TECHNIQUES.

13.1.2. CONTINUOUS SPECIAL INSPECTION OF BOLTS INSTALLED IN CONCRETE PRIOR TO AND DURING PLACEMENT OF CONCRETE.

13.1.3. SPECIFIC REQUIREMENTS FOR SPECIAL INSPECTION OF ANCHORS INSTALLED IN HARDENED CONCRETE SHALL BE AS DESCRIBED IN THE RESEARCH REPORT ISSUED BY AN APPROVED SOURCE (ICC, IAPMO, ETC.).

13.1.4. CONTINUOUS SPECIAL INSPECTION FOR CONCRETE REINFORCING BARS, CONCRETE MATERIALS OR PLACEMENT OF CONCRETE FOR COMPOSITE MEMBERS.

13.2. SPECIAL INSPECTIONS AND TESTS SHALL NOT BE REQUIRED FOR THE FOLLOWING:

13.2.1. NON-STRUCTURAL CONCRETE SLABS ON GRADE.

14.A REQUIRED SPECIAL INSPECTION AND TEST OF MASONRY CONSTRUCTION – MINIMUM VERIFICATION REQUIREMENTS

TMS 602 TABLE 3

MINIMUM VERIFICATION REQUIREMENTS	REQUIRED FOR QUALITY ASSURANCE LEVEL 1	REQUIRED FOR QUALITY ASSURANCE LEVEL 2	REFERENCE FOR CRITERIA TMS 602
1. PRIOR TO CONSTRUCTION, VERIFICATION OF COMPLIANCE OF SUBMITTALS.	✓	✓	ART. 1.5
2. PRIOR TO CONSTRUCTION, VERIFICATION OF f'_m AND f'_{acc} EXCEPT WHERE SPECIFICALLY EXEMPTED BY THE CODE.	N/R	✓	ART. 1.4 B
3. DURING CONSTRUCTION, VERIFICATION OF SLUMP FLOW AND VISUAL STABILITY INDEX (VSI) WHEN SELF- CONSOLIDATING GROUT IS DELIVERED TO THE PROJECT SITE.	N/R	✓	ART. 1.5 & 1.6.3
4. DURING CONSTRUCTION, VERIFICATION OF f'_m AND f'_{acc} FOR EVERY 5,000 SQUARE FEET	N/R	N/R	ART. 1.4 B
5. DURING CONSTRUCTION, VERIFICATION OF PROPORTIONS OF MATERIALS AS DELIVERED TO THE PROJECT SITE FOR PREMIXED OR PREBLENDED MORTAR, PRESTRESSING GROUT, AND GROUT OTHER THAN SELF-CONSOLIDATING GROUT.	N/R	N/R	ART. 1.4 B

14.

14.1. SPECIAL INSPECTION AND VERIFICATION OF MASONRY CONSTRUCTION SHALL BE IN ACCORDANCE WITH TMS 402 AND TMS 602 QUALITY ASSURANCE REQUIREMENTS, AS NOTED IN THE TABLES ABOVE INCLUDING:

14.1.1. FOR RISK CATEGORY I, II OR III, MINIMUM QUALITY ASSURANCE LEVEL FOR BRICK VENEER SHALL BE LEVEL 1, AS NOTED IN TABLE 14A.

15.A REQUIRED SPECIAL INSPECTION AND TESTS OF STRUCTURAL STEEL CONSTRUCTION – INSPECTION OF WELDING

	SPECIAL INSPECTION OR TEST TYPE	CONTINUOUS SPECIAL INSPECTION	PERIODIC SPECIAL INSPECTION	REFERENCED STANDARD
	AISC TABLE N5.4-1			
1.	PRIOR TO WELDING, VERIFY AND INSPECT THE FOLLOWING:	N/R	✓	
A.	WELDER QUALIFICATION RECORDS AND CONTINUITY RECORDS	✓	N/R	
B.	WELDING PROCEDURE SPECIFICATIONS (WPS)	✓	N/R	
C.	MANUFACTURER CERTIFICATIONS FOR WELDING CONSUMABLES	✓	N/R	AISC 360 A3.5
C.	MATERIAL IDENTIFICATION OF STRUCTURAL STEEL MEMBERS	N/R	✓	AISC 360 A3.1
E.	WELDER IDENTIFICATION SYSTEM	N/R	✓	
F.	FIT-UP OF GROOVE WELDS, INCLUDING JOINT GEOMETRY			
	1) JOINT PREPARATION	N/R	✓	
	2) DIMENSIONS: ALIGNMENT, ROOT OPENING, ROOT FACE, BEVEL	N/R	✓	
	3) CLEANLINESS: CONDITION OF STEEL SURFACES	N/R	✓	
	4) TACKING: TACK WELD QUALITY AND LOCATION	N/R	✓	
	5) BACKING TYPE AND FIT (IF APPLICABLE)	N/R	✓	
G.	FIT-UP OF CJP GROOVE WELDS OF HSS T-,Y- AND K-JOINTS WITHOUT BACKING, INCLUDING JOINT GEOMETRY.			
	1) JOINT PREPARATION	✓	N/R	
	2) DIMENSIONS: ALIGNMENT, ROOT OPENING, ROOT FACE, BEVEL	✓	N/R	
	3) CLEANLINESS: CONDITION OF STEEL SURFACES	✓	N/R	
	4) TACKING: TACK WELD QUALITY AND LOCATION	✓	N/R	
H.	CONFIGURATION AND FINISH OF ACCESS HOLES	N/R	✓	
H.	FIT-UP OF FILLET WELDS			
	1) DIMENSIONS: ALIGNMENT, GAPS AT ROOT	N/R	✓	
	2) CLEANLINESS: CONDITION OF STEEL SURFACES	N/R	✓	
	3) TACKING: TACK WELD QUALITY AND LOCATION	N/R	✓	
I.	CHECK WELDING EQUIPMENT	N/R	✓	
	AISC 360 TABLE N5.4-2			
2.	DURING WELDING, VERIFY AND INSPECT THE FOLLOWING:			
A.	USE OF QUALIFIED WELDERS	N/R	✓	
B.	CONTROL AND HANDLING OF WELDING CONSUMABLES			
	1) PACKAGING	N/R	✓	
	2) EXPOSURE CONTROL	N/R	✓	
C.	NO WELDING OVER CRACKED TACK WELDS	N/R	✓	
D.	ENVIRONMENTAL CONDITIONS			
	1) WIND SPEED WITHIN LIMITS	N/R	✓	
	2) PRECIPITATION AND TEMPERATURE	N/R	✓	
E.	WELDING PROCEDURE SPECIFICATIONS FOLLOWED			
	1) SETTINGS ON WELDING EQUIPMENT	N/R	✓	
	2) TRAVEL SPEED	N/R	✓	
	3) SELECTED WELDING MATERIALS	N/R	✓	
	4) SHIELDING GAS TYPE AND FLOW RATE	N/R	✓	
	5) PREHEAT APPLIED	N/R	✓	
	6) INTERPASS TEMPERATURE MAINTAINED	N/R	✓	
	7) PROPER POSITION	N/R	✓	
F.	WELDING TECHNIQUES			
	1) INTERPASS AND FINAL CLEANING	N/R	✓	
	2) EACH PASS WITHIN PROFILE LIMITATIONS	N/R	✓	
	3) EACH PASS MEETS QUALITY REQUIREMENTS	N/R	✓	
G.	PLACEMENT AND INSTALLATION OF STEEL HEADED STUD ANCHORS	✓	N/R	
	AISC 360 TABLE N5.4-3			
3.	AFTER WELDING, VERIFY AND INSPECT THE FOLLOWING:			
A.	WELDS CLEANED	N/R	✓	
B.	SIZE, LENGTH, AND LOCATION OF WELDS	✓	N/R	
C.	WELDS MEET VISUAL ACCEPTANCE CRITERIA			
	1) CRACK PROHIBITION	✓	N/R	
	2) WELD TO BASE METAL FUSION	✓	N/R	
	3) CRATER CROSS SECTION	✓	N/R	
	4) WELD PROFILES	✓	N/R	
	5) WELD SIZE	✓	N/R	
	6) UNDERCUT	✓	N/R	
	7) POROSITY	✓	N/R	
D.	ARC STRIKES	✓	N/R	
E.	k-AREA	✓	N/R	
F.	BACKING REMOVED AND WELD TABS REMOVED, IF REQUIRED	✓	N/R	
G.	REPAIR ACTIVITIES	✓	N/R	
H.	DOCUMENT ACCEPTANCE OR REJECTION OF WELDED JOINT OR MEMBER	✓	N/R	
I.	NO PROHIBITED WELDS HAVE BEEN ADDED WITHOUT THE APPROVAL OF THE ENGINEER OF RECORD	N/R	✓	

UNOFFICIAL COPY Official bid documents, plan holder's list, and addenda (if applicable) are available on BXWA.com

PLOTTED: 5/10/2024 5:35:35 PM PROJECT: a23-087 - CITY OF FEDERAL WAY
FILE PATH: C:\Users\kgysler\Documents\2200572-STRUCT-R22-Bldg B_kgysler2FSQ3.rvt

Helix design group

AMERICAN INSTITUTE OF ARCHITECTS

ANDREW DEAN McEACHRAN · STATE OF WASHINGTON · STRUCTURAL · PROFESSIONAL ENGINEER

HELIX DESIGN GROUP, INC

AHBL
TACOMA · SEATTLE · SPOKANE · TRI-CITIES
253.383.2422 TEL 253.383.2572 FAX www.ahbl.com WEB
2215 North 30th Street, Suite 300 Tacoma, WA 98403

QUALITY ASSURANCE PLAN

CITY OF FEDERAL WAY FLEET & SHOP BUILDING

FEDERAL WAY, WASHINGTON

REVISION	DATE

DATE	JOB NO.
05.06.24	a23-087

BID SET

SB010

DRAWING NO.

© HELIX DESIGN GROUP, INC.: All rights reserved. No part of this document may be reproduced in any form or by any means without permission in writing from Helix Design Group.

15.B REQUIRED SPECIAL INSPECTION AND TESTS OF STRUCTURAL STEEL CONSTRUCTION – INSPECTION OF BOLTING

	SPECIAL INSPECTION OR TEST TYPE	CONTINUOUS SPECIAL INSPECTION	PERIODIC SPECIAL INSPECTION	REFERENCED STANDARD
	AISC 360 TABLE N5.6-1			
1.	PRIOR TO BOLTING, VERIFY AND INSPECT THE FOLLOWING:			
A.	MANUFACTURER'S CERTIFICATIONS FOR FASTENER MATERIALS	✓	N/R	
B.	FASTENERS MARKED IN ACCORDANCE WITH ASTM REQUIREMENTS	N/R	✓	
C.	PROPER FASTENER SELECTED FOR JOINT DETAIL	N/R	✓	AISC 360 A3.1
D.	PROPER BOLTING PROCEDURE SELECTED FOR JOINT DETAIL	N/R	✓	
E.	CONNECTING ELEMENTS, INCLUDING THE APPROPRIATE FAYING SURFACE CONDITIONS AND HOLE PREPARATION, IF SPECIFIED, MEET APPLICABLE REQUIREMENTS	N/R	✓	
F.	PRE-INSTALLATION VERIFICATION TESTING BY INSTALLATION PERSONNEL OBSERVED AND DOCUMENTED FOR FASTENER ASSEMBLIES AND METHODS USED	✓	N/R	
G.	PROPER STORAGE PROVIDED FOR BOLTS, NUTS, WASHERS, AND OTHER FASTENER COMPONENTS	N/R	✓	
	AISC 360 TABLE N5.6-2			
2.	DURING BOLTING, VERIFY AND INSPECT THE FOLLOWING:			
A.	FASTENER ASSEMBLIES, OF SUITABLE CONDITION, PLACED IN ALL HOLES AND WASHERS (IF REQUIRED) ARE POSITIONED AS REQUIRED	N/R	✓	
B.	JOINT BROUGHT TO THE SNUG-TIGHT CONDITION PRIOR TO THE PRETENSIONING OPERATION	N/R	✓	
C.	FASTENER COMPONENT NOT TURNED BY THE WRENCH PREVENTED FROM ROTATING	N/R	✓	
D.	FASTENERS ARE PRETENSIONED IN ACCORDANCE WITH THE RCSC SPECIFICATION, PROGRESSING SYSTEMATICALLY FROM THE MOST RIGID POINT TOWARD THE FREE EDGES	N/R	✓	
	AISC 360 TABLE N5.6-3			
3.	AFTER BOLTING, VERIFY AND INSPECT THE FOLLOWING:			
A.	DOCUMENT ACCEPTANCE OR REJECTION OF BOLTED CONNECTIONS	✓	N/R	

15.C REQUIRED SPECIAL INSPECTION AND TESTS OF COLD FORMED STEEL DECK

	SPECIAL INSPECTION OR TEST TYPE	CONTINUOUS SPECIAL INSPECTION	PERIODIC SPECIAL INSPECTION	REFERENCED STANDARD
	SDI QA/QC TABLE 1.1			
1.	PRIOR TO DECK PLACEMENT VERIFY AND INSPECT THE FOLLOWING:			
A.	COMPLIANCE OF MATERIALS (DECK AND ALL ACCESSORIES) WITH CONSTRUCTION DOCUMENTS INCLUDING PROFILES, MATERIAL PROPERTIES, AND BASE METAL THICKNESS	✓	N/R	
B.	DOCUMENT ACCEPTANCE OR REJECTION OF DECK AND DECK ACCESSORIES	✓	N/R	
	SDI QA/QC TABLE 1.2			
2.	AFTER DECK PLACEMENT VERIFY AND INSPECT THE FOLLOWING:			
A.	COMPLIANCE OF DECK AND ALL ACCESSORIES INSTALLATION WITH CONSTRUCTION DOCUMENTS	✓	N/R	
B.	DECK MATERIALS ARE REPRESENTED BY THE MILL CERTIFICATIONS THAT COMPLY WITH THE CONSTRUCTION DOCUMENTS	✓	N/R	
C.	DOCUMENT ACCEPTANCE OR REJECTION OF INSTALLATION OF DECK AND ACCESSORIES	✓	N/R	
	SDI QA/QC TABLE 1.3			
3.	PRIOR TO WELDING, VERIFY AND INSPECT THE FOLLOWING:			
A.	WELDING PROCEDURE SPECIFICATION (WPS)	N/R	✓	
B.	MANUFACTURER CERTIFICATIONS FOR WELDING CONSUMABLES	N/R	✓	
C.	MATERIAL IDENTIFICATION (TYPE/GRADE)	N/R	✓	
D.	CHECK WELDING EQUIPMENT	N/R	✓	
	SDI QA/QC TABLE 1.4			
4.	DURING WELDING, VERIFY AND INSPECT THE FOLLOWING:			
A.	USE OF QUALIFIED WELDERS	N/R	✓	
B.	CONTROL AND HANDLING OF WELDING CONSUMABLES	N/R	✓	
C.	ENVIRONMENTAL CONDITIONS (WIND SPEED, MOISTURE, TEMPERATURE)	N/R	✓	
D.	WPS FOLLOWED	N/R	✓	
	SDI QA/QC TABLE 1.5			
5.	AFTER WELDING, VERIFY AND INSPECT THE FOLLOWING:			
A.	SIZE AND LOCATION OF WELDS INCLUDING SUPPORT, SIDE LAP AND PERIMETER	✓	N/R	
B.	WELDS MEET VISUAL ACCEPTANCE CRITERIA	✓	N/R	
C.	VERIFY REPAIR ACTIVITIES	✓	N/R	
D.	DOCUMENT ACCEPTANCE OR REJECTION OF WELDS	✓	N/R	
	SDI QA/QC TABLE 1.6			
6.	PRIOR TO MECHANICAL FASTENING, VERIFY AND INSPECT THE FOLLOWING:			
A.	MANUFACTURER INSTALLATION INSTRUCTIONS AVAILABLE FOR MECHANICAL FASTENERS	N/R	✓	
B.	PROPER TOOLS AVAILABLE FOR FASTENER INSTALLATION	N/R	✓	
C.	PROPER STORAGE FOR MECHANICAL FASTENERS	N/R	✓	
	SDI QA/QC TABLE 1.7			
7.	DURING MECHANICAL FASTENING, VERIFY OR INSPECT THE FOLLOWING:			
A.	FASTENERS ARE POSITIONED AS REQUIRED	N/R	✓	
B.	FASTENERS ARE INSTALLED IN ACCORDANCE WITH MANUFACTURER'S INSTRUCTIONS	N/R	✓	
	SDI QA/QC TABLE 1.8			
8.	AFTER MECHANICAL FASTENING, VERIFY OR INSPECT THE FOLLOWING:			
A.	CHECK SPACING, TYPE, AND INSTALLATION OF SUPPORT FASTENERS	✓	N/R	
B.	CHECK SPACING, TYPE, AND INSTALLATION OF SIDELAP FASTENERS	✓	N/R	
C.	CHECK SPACING, TYPE, AND INSTALLATION OF PERIMETER FASTENERS	✓	N/R	
D.	VERIFY REPAIR ACTIVITIES	✓	N/R	
E.	DOCUMENT ACCEPTANCE OR REJECTION OF MECHANICAL FASTENERS	✓	N/R	

15.D REQUIRED SPECIAL INSPECTION AND TESTS OF OPEN-WEB STEEL JOIST AND JOIST GIRDERS

	SPECIAL INSPECTION OR TEST TYPE	CONTINUOUS SPECIAL INSPECTION	PERIODIC SPECIAL INSPECTION	REFERENCED STANDARD
	IBC TABLE 1705.2.3			
1.	INSTALLATION OF OPEN-WEB STEEL JOISTS AND JOIST GIRDERS			
A.	END CONNECTIONS - WELDED OR BOLTED	N/R	✓	SJI SPECIFICATIONS
B.	BRIDGING - HORIZONTAL OR DIAGONAL			
1.	STANDARD BRIDGING.	N/R	✓	SJI SPECIFICATIONS
2.	BRIDGING THAT DIFFERS FROM TH SJI SPECIFICATIONS LISTED IN SECTION 2207.1	N/R	✓	

15.

15.1. STRUCTURAL STEEL CONSTRUCTION:

SPECIAL INSPECTION AND NONDESTRUCTIVE TESTING OF STRUCTURAL STEEL ELEMENTS SHALL BE IN ACCORDANCE WITH THE QUALITY CONTROL AND QUALITY ASSURANCE REQUIREMENTS OF AISC 360, AS NOTED IN TABLES 15A, 15B, AND AWS D1.1, INCLUDING:

15.1.1. INSPECTION OF ERECTED STEEL SYSTEM.

15.1.2. REVIEW OF MATERIAL TEST REPORTS AND CERTIFICATIONS FOR COMPLIANCE WITH THE CONSTRUCTION DOCUMENTS.

15.1.3. OBSERVATION OF WELDING OPERATIONS AND VISUAL INSPECTION OF IN-PROCESS AND COMPLETED WELDS SHALL BE AS FOLLOWS:

A. VERIFY THAT WELD FILLER MATERIAL AND MANUFACTURER'S CERTIFICATE OF COMPLIANCE CONFORM TO AWS SPECIFICATION SPECIFIED. VERIFY WELDERS ARE CERTIFIED BY WABO, THAT PROPER ELECTRODES IN OVEN DRY CONDITIONS ARE USED, AND THAT PROPER METHODS AND PREPARATIONS ARE USED.

B. PERIODIC SPECIAL INSPECTION OF WELDING SHALL BE PERFORMED FOR SINGLE PASS FILLET WELDS LESS THAN OR EQUAL TO 5/16" AND FLOOR AND DECK WELDS.

C. CONTINUOUS SPECIAL INSPECTION OF WELDING SHALL BE PERFORMED ON COMPLETE AND PARTIAL PENETRATION GROOVE WELDS AND FILLET WELDS GREATER THAN 5/16".

D. ALL WELDS SHALL BE CHECKED VISUALLY.

E. ALL SHOP AND FIELD WELDING SHALL BE SUBJECT TO INSPECTION BY A WABO CERTIFIED WELDING INSPECTOR EMPLOYED BY THE OWNER. THE INSPECTOR SHALL UTILIZE RADIOGRAPHIC, ULTRASONIC, OR MAGNETIC PARTICLE TESTING AND ANY OTHER AID TO VISUAL INSPECTION THAT MAY BE DEEMED NECESSARY TO ASSURE THE ADEQUACY OF WELDING. THE OWNER SHALL CARRY OUT TESTING AND INTERPRETATION AT ANY STAGE AFTER WELDING.

F. 10% OF ALL FILLET WELDS SHALL BE CHECKED BY MAGNETIC PARTICLE TESTING.

G. 100% OF ALL COMPLETE PENETRATION WELDS SHALL BE CHECKED BY ULTRASONIC TESTING.

H. ALL WELDS FOUND DEFECTIVE AND REPAIRED SHALL BE REINSPECTED BY THE SAME METHOD ORIGINALLY USED. THE COST OF REPAIR AND REINSPECTION SHALL BE BORNE BY THE CONTRACTOR.

I. STANDARDS FOR ACCEPTANCE SHALL BE AS GIVEN IN AWS D1.1.

15.1.4. OBSERVATION OF BOLTING OPERATIONS.

15.1.5. WHERE CONTINUOUS SPECIAL INSPECTION IS NOTED, IT SHALL BE PERFORMED FOR EACH JOINT OR MEMBER. WHERE PERIODIC SPECIAL INSPECTION IS NOTED, IT SHALL BE PERFORMED ON ITEMS ON A RANDOM BASIS. PERIODIC SPECIAL INSPECTION NEED NOT DELAY FABRICATION OR ERECTION OPERATIONS.

15.1.6. COLD FORMED STEEL DECK:

SPECIAL INSPECTIONS AND QUALIFICATION FOR WELDING SPECIAL INSPECTORS SHALL BE IN ACCORDANCE WITH THE QUALITY ASSURANCE INSPECTION REQUIREMENTS OF SDI QA/QC, AS NOTED IN TABLE 15C.

15.1.7. OPEN-WEB STEEL JOISTS AND JOIST GIRDERS:

SPECIAL INSPECTIONS OF OPEN-WEB STEEL JOISTS AND JOIST GIRDERS SHALL BE IN ACCORDANCE WITH TABLE 15D.

15.1.8. EPOXY ANCHORS: SPECIFIC REQUIREMENTS FOR INSPECTION OF ANCHORS INSTALLED IN HARDENED CONCRETE OR MASONRY SHALL BE AS DESCRIBED IN THE RESEARCH REPORT ISSUED BY AN APPROVED SOURCE (ICC, IAPMO, ETC.).

15.1.9. EXPANSION ANCHORS: SPECIFIC REQUIREMENTS FOR INSPECTION OF ANCHORS INSTALLED IN HARDENED CONCRETE OR MASONRY SHALL BE AS DESCRIBED IN THE RESEARCH REPORT ISSUED BY AN APPROVED SOURCE (ICC, IAPMO, ETC.).

18. REQUIRED SPECIAL INSPECTION AND TESTS FOR SEISMIC RESISTANCE

	SPECIAL INSPECTION OR TEST TYPE	CONTINUOUS SPECIAL INSPECTION	PERIODIC SPECIAL INSPECTION
3.	ARCHITECTURAL COMPONENTS IN SEISMIC DESIGN CATEGORY D, E OR F:		
A.	THE ERECTION AND FASTENING OF EXTERIOR CLADDING, INTERIOR AND EXTERIOR NON-BEARING WALLS, AND INTERIOR AND EXTERIOR VENEER	N/R	✓
4.	PLUMBING, MECHANICAL AND ELECTRICAL COMPONENTS IN SEISMIC DESIGN CATEGORY C, D, E OR F:		
A.	ANCHORAGE OF ELECTRICAL EQUIPMENT FOR EMERGENCY OR STANDBY POWER SYSTEMS	N/R	✓
5.	ANCHORAGE OF STORAGE RACKS THAT ARE 8 FEET OR GREATER IN HEIGHT IN STRUCTURES ASSIGNED TO SEISMIC DESIGN CATEGORY D, E OR F.	N/R	✓

18.

18.1. SPECIAL INSPECTIONS AND TESTING FOR SEISMIC RESISTANCE:

18.1.1. SPECIAL INSPECTIONS FOR SEISMIC RESISTANCE PER IBC 1705.12 SHALL BE REQUIRED FOR SEISMIC FORCE-RESISTING SYSTEMS IN STRUCTURES ASSIGNED TO SEISMIC DESIGN CATEGORY B, C, D, E OR F PER TABLE 18 AND THE FOLLOWING:

A. SPECIAL INSPECTIONS OF STRUCTURAL STEEL SHALL BE IN ACCORDANCE WITH THE QUALITY ASSURANCE REQUIREMENTS OF AISC 341.

18.1.2. TESTING AND QUALIFICATION FOR SEISMIC RESISTANCE PER IBC 1705.13 SHALL BE REQUIRED FOR SEISMIC FORCE-RESISTING SYSTEM IN STRUCTURES ASSIGNED TO SEISMIC DESIGN CATEGORY C, D, E OR F FOR THE FOLLOWING:

A. NONDESTRUCTIVE TESTING FOR STRUCTURAL STEEL SHALL BE IN ACCORDANCE WITH THE QUALITY ASSURANCE REQUIREMENTS OF AISC 341.

18.1.3. SPECIAL INSPECTION IS NOT REQUIRED FOR THE FOLLOWING:

A. SPECIAL INSPECTION IS NOT REQUIRED FOR ARCHITECTURAL COMPONENTS WHERE:

a. EXTERIOR CLADDING, INTERIOR AND EXTERIOR NONBEARING WALLS AND INTERIOR AND EXTERIOR VENEER ARE 30 FEET OR LESS IN HEIGHT ABOVE GRADE OR WALING SURFACE.

b. EXTERIOR CLADDING AND INTERIOR AND EXTERIOR VENEERS WEIGHTING 5 PSF OR LESS.

c. INTERIOR NONBEARING WALLS WEIGHING 15 PSF OR LESS.

UNOFFICIAL COPY Official bid documents, plan holder's list, and addenda (if applicable) are available on BXWA.com

PLOTTED: 5/10/2024 5:35:36 PM PROJECT: a23-087 - CITY OF FEDERAL WAY
FILE PATH: C:\Users\kgysler\Documents\2200572-STRUCT-R22-Bldg B_kgysler2FSQ3.rvt

Helix design group

AMERICAN INSTITUTE OF ARCHITECTS

HELIX DESIGN GROUP, INC

AHBL
TACOMA · SEATTLE · SPOKANE · TRI-CITIES
253.383.2422 TEL 253.383.2572 FAX www.ahbl.com WEB
2215 North 30th Street, Suite 300 Tacoma, WA 98403

QUALITY ASSURANCE PLAN

CITY OF FEDERAL WAY
FLEET & SHOP BUILDING

FEDERAL WAY, WASHINGTON

REVISION	DATE

DATE 05.06.24
JOB NO. a23-087

BID SET

SB011

DRAWING NO.

© HELIX DESIGN GROUP, INC.: All rights reserved. No part of this document may be reproduced in any form or by any means without permission in writing from Helix Design Group.

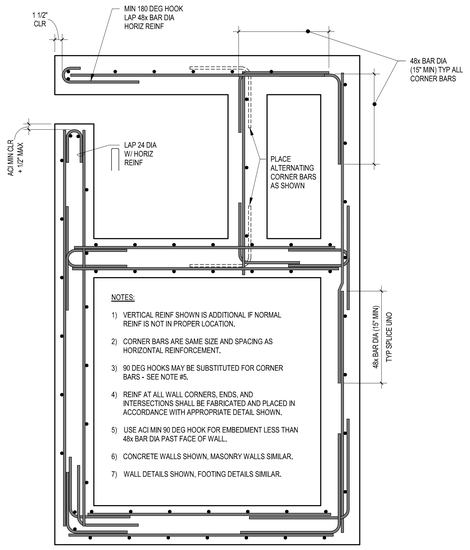

PLAN VIEW TYPICAL REINFORCEMENT PLACING DETAIL

1 TYPICAL
1" = 1'-0" SB020-1

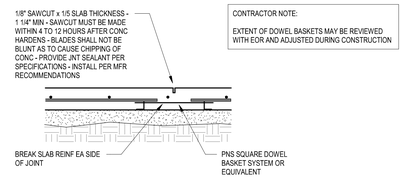

TYPICAL CONTROL JOINT W/ DOWEL BASKETS

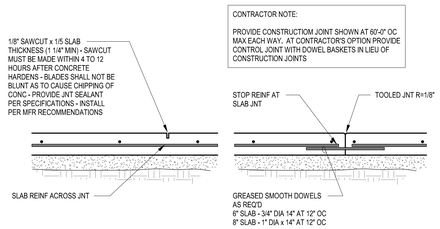

TYPICAL CONTROL JOINT

TYPICAL CONSTRUCTION JOINT

2 TYPICAL
1" = 1'-0"

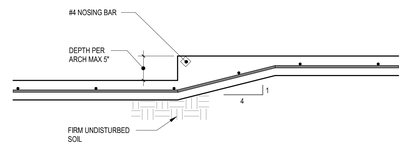

TYPICAL AT STEPS IN CONC SLAB ON GRADE

3 TYPICAL
1" = 1'-0" TYPICAL

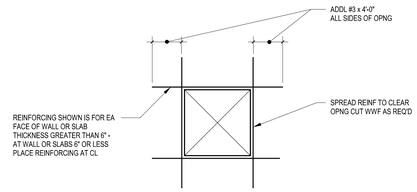

TYPICAL REINFORCING AT OPENINGS LESS THAN 12" IN CONC WALL OR SLAB

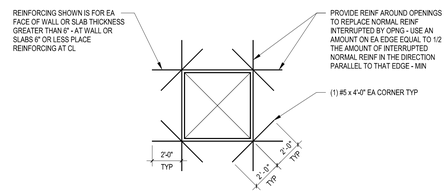

TYPICAL REINFORCING AT OPENINGS GREATER THAN 12" IN CONC WALL OR SLAB

4 TYPICAL
1/4" = 1'-0" TYPICAL

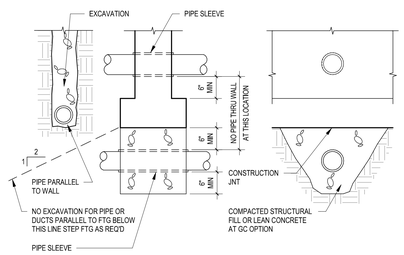

TYPICAL DETAIL OF PIPE AT CONCRETE FOOTING

5 TYPICAL
1" = 1'-0"

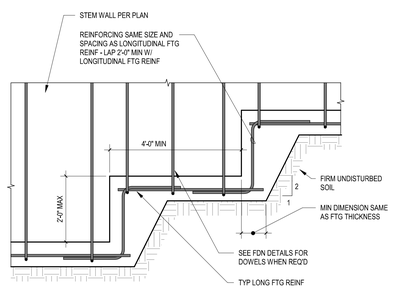

TYPICAL STEPPED FOOTING

6 TYPICAL
1" = 1'-0"

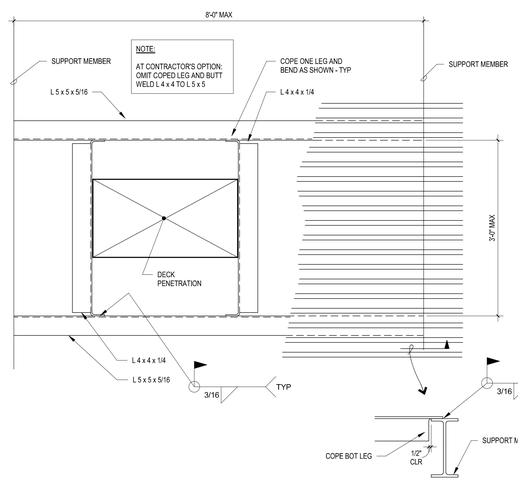

TYPICAL OPENINGS IN METAL DECK GREATER THAN 16" DIA (OR 16" x 16")

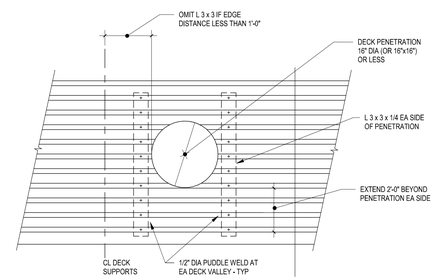

TYPICAL OPENINGS IN METAL DECK LESS THAN 16" DIA (OR 16" x 16")

7 TYPICAL
1" = 1'-0"

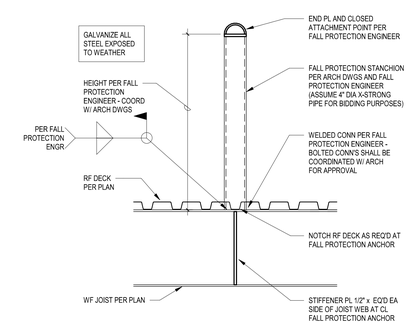

TYPICAL FALL PROTECTION ANCHOR REQUIREMENTS

8 TYPICAL
1" = 1'-0" SB020-8

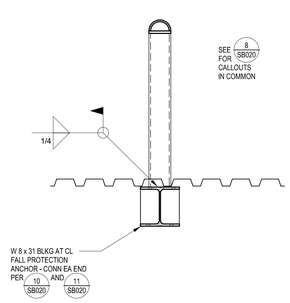

TYPICAL FALL PROTECTION ANCHOR REQUIREMENTS

9 TYPICAL
1" = 1'-0" SB020-9

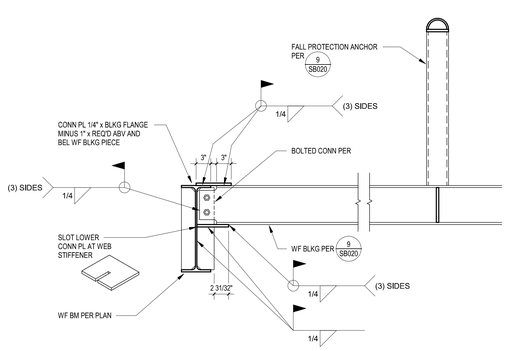

10 TYPICAL
1" = 1'-0" SB020-10

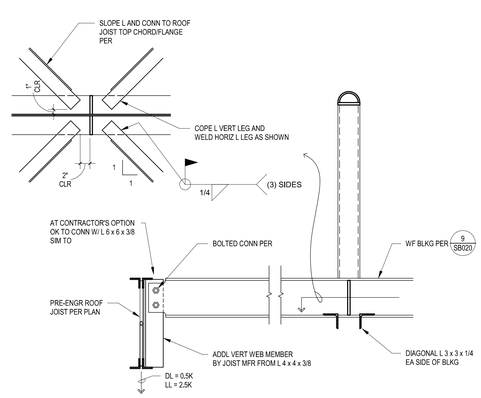

11 TYPICAL
1" = 1'-0" SB020-11

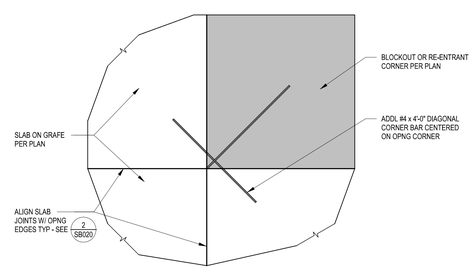

ADDL SLAB REINF AT CORNERS

12 TYPICAL
1/2" = 1'-0"

Helix design group

AMERICAN INSTITUTE OF ARCHITECTS

HELIX DESIGN GROUP, INC

AHBL
TACOMA - SEATTLE - SPOKANE - TRI-CITIES
253.383.2422 TEL 253.383.2572 FAX www.ahbl.com WEB
2215 North 30th Street, Suite 300 Tacoma, WA 98403

TYPICAL DETAILS

CITY OF FEDERAL WAY
FLEET & SHOP BUILDING

FEDERAL WAY, WASHINGTON

REVISION	DATE

DATE	JOB NO.
05.06.24	o23-087

BID SET

SB020

DRAWING NO.

© HELIX DESIGN GROUP, INC.: All rights reserved. No part of this document may be reproduced in any form or by any means without permission in writing from Helix Design Group.

PLOTTED: 5/10/2024 5:35:38 PM PROJECT: a23-087 - CITY OF FEDERAL WAY
FILE PATH: C:\Users\kgysler\Documents\22005\2STRUCT-R22-Bldg B_kgysler2FS23.rvt

UNOFFICIAL COPY Official bid documents, plan holder's list, and addenda (if applicable) are available on BXWA.com

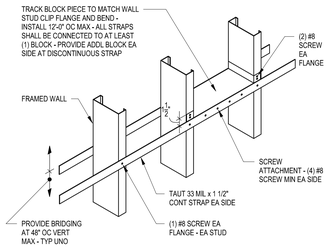

TYPE 1 BRIDGING - DOUBLE FLAT STRAP WITH BLOCKING

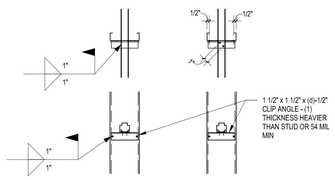

WELDED ANGLE SCREWED ANGLE

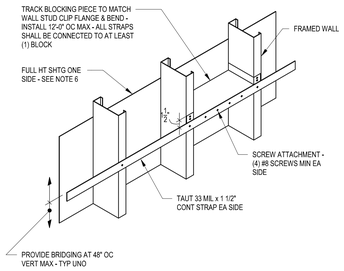

TYPE 3 BRIDGING - SHEATHING WITH SINGLE FLAT STRAP WITH BLOCKING

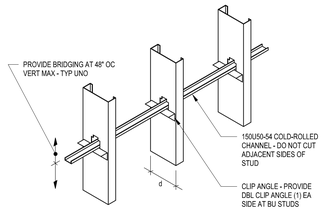

TYPE 2 BRIDGING - COLD-ROLLED CHANNEL WITH CLIP ANGLE

NOTES:
1. PROVIDE BRIDGING ON ALL LOAD BEARING AND CURTAIN WALL STUDS.
2. USE ONLY TYPE 1 AND TYPE 2 BRIDGING FOR LOAD BEARING STUD WALLS (SUPPORTING ROOFS, FLOORS, MEZZANINE, ETC.)
3. INSTALL ALL BRIDGING PRIOR TO INSTALLATION OF SUPPORTED FRAMING.
4. NO BRIDGING REQUIRED AT WALLS WITH FULL HEIGHT SHEATHING EACH SIDE.
5. TYPE 2 BRIDGING NOT ALLOWED ON STUDS GREATER THAN 6" DEEP.
6. QUALIFIED SHEATHING SHALL BE GWB, GYPSHEATHING, PW, OR OSB ONLY.
7. TYPICAL MINIMUM EDGE DISTANCE = 3x SCREW DIAMETER.

TYPICAL BRIDGING AT COLD-FORMED STEEL WALL

1 TYPICAL
1" = 1'-0" SB021-1

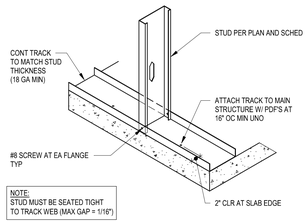

NOTE:
STUD MUST BE SEATED TIGHT TO TRACK WEB (MAX GAP = 1/16")

STUD WALL BOTTOM TRACK ATTACHMENT

2 TYPICAL
1" = 1'-0" SB021-2

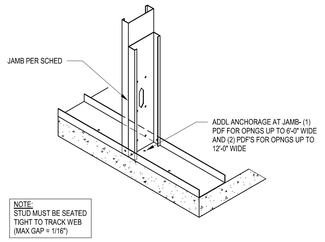

NOTE:
STUD MUST BE SEATED TIGHT TO TRACK WEB (MAX GAP = 1/16")

JAMB STUD ATTACHMENT

3 TYPICAL
1" = 1'-0" SB021-3

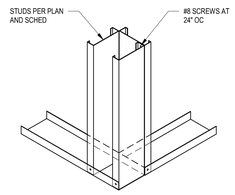

WALL CORNER - BOTTOM TRACK

4 TYPICAL
1" = 1'-0" SB021-4

SINGLE STUD

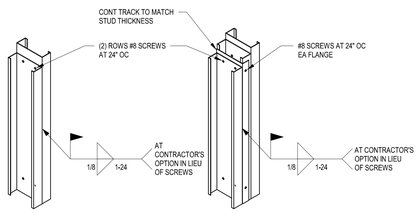

BACK-TO-BACK JAMB (2 STUDS) BACK-TO-BACK JAMB (3 OR MORE STUDS)

TYPICAL JAMB STUD CONFIGURATIONS

5 TYPICAL
1" = 1'-0" SB021-5

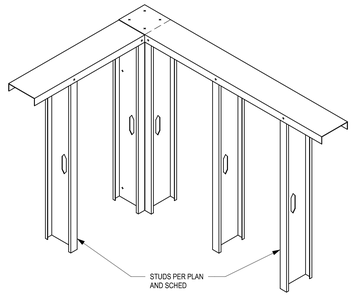

WALL CORNER - TOP TRACK

6 TYPICAL
1" = 1'-0" SB021-6

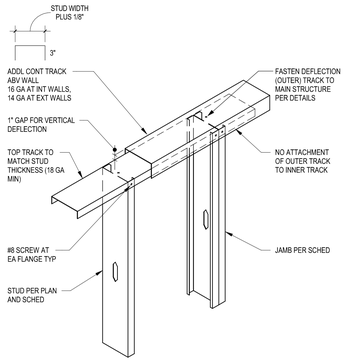

TYPICAL DEFLECTION TRACK ASSEMBLY

7 TYPICAL
1" = 1'-0" SB021-7

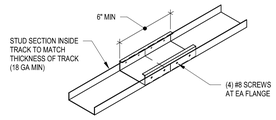

TYPICAL BOTTOM / TOP TRACK SPLICE

8 TYPICAL
1" = 1'-0" SB021-8

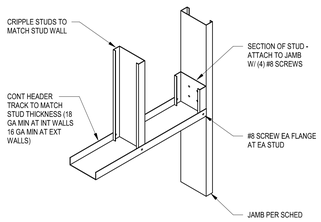

TYPICAL NON-LOAD BEARING HEADER (4'-0" MAX OPNG)

9 TYPICAL
1" = 1'-0" SB021-9

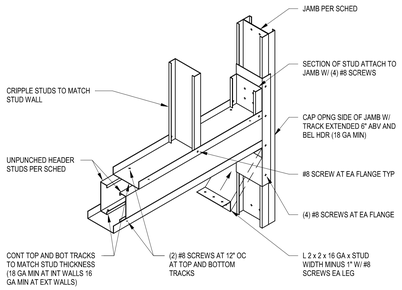

BUILT-UP BOX HEADER (12'-0" MAX OPNG)

10 TYPICAL
1" = 1'-0" SB021-10

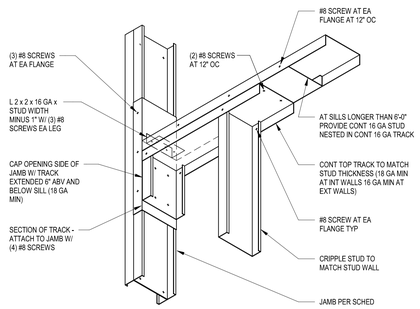

TYPICAL WINDOW SILL

11 TYPICAL
1" = 1'-0" SB021-11

PLOTTED: 5/10/2024 5:35:40 PM PROJECT: a23-087 - CITY OF FEDERAL WAY
FILE PATH: C:\Users\kgylster\Documents\220057\STRUCT-R22-Bldg B_kgylster2FSD3.rvt

UNOFFICIAL COPY Official bid documents, plan holder's list, and addenda (if applicable) are available on BXWA.com

Helix design group
AMERICAN INSTITUTE OF ARCHITECTS
HELIX DESIGN GROUP, INC
AHBL
TACOMA - SEATTLE - SPOKANE - TRI-CITIES
253.383.2422 TEL 253.383.2572 FAX www.ahbl.com WEB
2215 North 30th Street, Suite 300 Tacoma, WA 98403

STEEL STUD DETAILS

CITY OF FEDERAL WAY
FLEET & SHOP BUILDING

FEDERAL WAY, WASHINGTON

REVISION	DATE

DATE	JOB NO.
05.06.24	a23-087

BID SET

SB021

DRAWING NO.

© HELIX DESIGN GROUP, INC.: All rights reserved. No part of this document may be reproduced in any form or by any means without permission in writing from Helix Design Group.

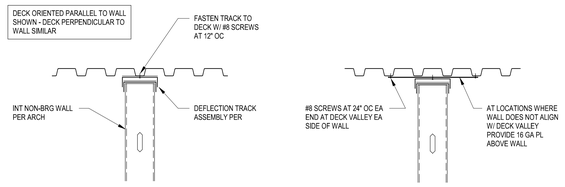

TYPICAL CONNECTION TO ROOF DECK

CONNECTION AT MISALIGNED DECK

1 SECTION

1" = 1'-0" SA022-1

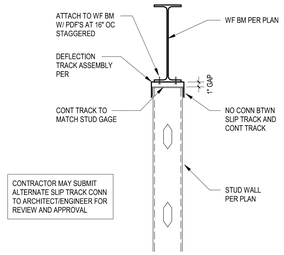

TYPICAL EXTERIOR WALL SLIP TRACK CONNECTION

2 SECTION

1" = 1'-0" SA022-2

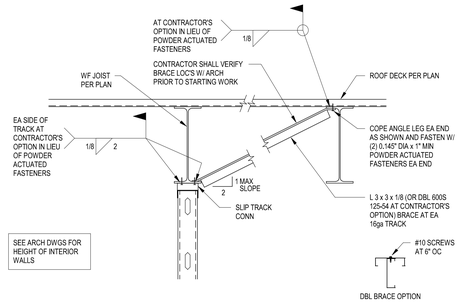

3 SECTION

1" = 1'-0" SA022-3

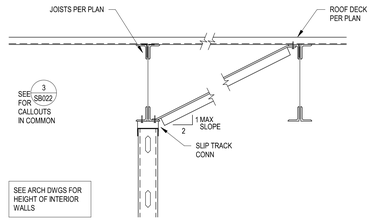

4 SECTION

1" = 1'-0" SA022-4

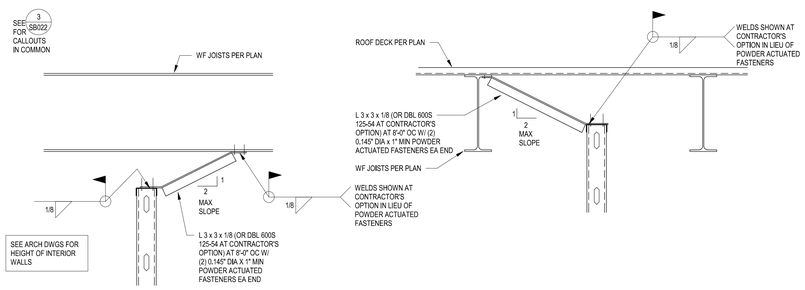

5 SECTION

1" = 1'-0" SA022-5

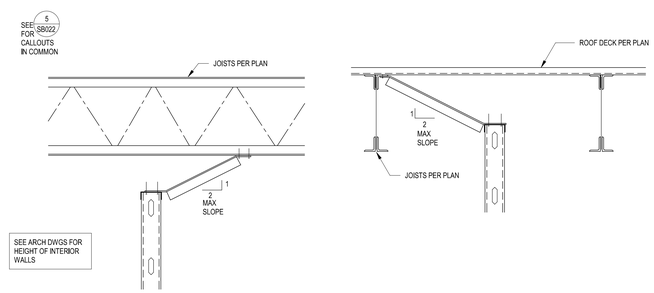

6 SECTION

1" = 1'-0" SA022-6

UNOFFICIAL COPY Official bid documents, plan holder's list, and addenda (if applicable) are available on BXWA.com

PLOTTED: 5/10/2024 5:35:42 PM PROJECT: a23-087 - CITY OF FEDERAL WAY
FILE PATH: C:\Users\kgylster\Documents\220057\STRUCT-R22-Bldg B_kgylster.rvt

Helix design group

AMERICAN INSTITUTE OF ARCHITECTS

HELIX DESIGN GROUP, INC

AHBL
TACOMA - SEATTLE - SPOKANE - TRI-CITIES
253.383.2422 TEL 253.383.2572 FAX www.ahbl.com WEB
2215 North 30th Street, Suite 300 Tacoma, WA 98403

STEEL STUD DETAILS

CITY OF FEDERAL WAY
FLEET & SHOP BUILDING

FEDERAL WAY, WASHINGTON

REVISION	DATE

DATE	JOB NO.
05.06.24	a23-087

BID SET

SB022

DRAWING NO.

© HELIX DESIGN GROUP, INC.: All rights reserved. No part of this document may be reproduced in any form or by any means without permission in writing from Helix Design Group.

FOUNDATION NOTES

1. SEE SHEETS SB001 AND SB002 FOR STRUCTURAL NOTES. SEE SHEET SB020 FOR TYPICAL DETAILS, SEE SHEETS SB010 AND SB011 FOR TESTING AND INSPECTION NOTES.
2. SEE GEOTECHNICAL ENGINEERING REPORT FOR ALL FOUNDATION AND SLAB SUPPORT REQUIREMENTS. THIS INCLUDES ALL EXCAVATION, FILL AND FILL PLACEMENT REQUIREMENTS.
3. SEE ARCHITECTURAL/MECHANICAL DRAWINGS FOR DRAINS, SLOPES, AND OTHER FLOOR DEPRESSIONS NOT SHOWN.
4. SEE ARCHITECTURAL DRAWINGS FOR DIMENSIONS, ELEVATIONS, AND WALLS NOT SHOWN.
5. VERIFY ALL WINDOW AND DOOR WIDTHS AND HEIGHTS WITH ARCHITECTURAL DRAWINGS.
6. LOCATIONS OF COLUMNS LOCATED IN WALLS ARE SHOWN SCHEMATICALLY ON STRUCTURAL DRAWINGS. THE CONTRACTOR IS TO COORDINATE LOCATION OF COLUMNS WITH ARCHITECTURAL DRAWINGS.
7. COLUMNS NOT SPECIFICALLY LOCATED BY DIMENSIONS SHALL BE LOCATED ADJACENT TO OPENINGS AS DIMENSIONED BY THE ARCHITECT. SEE ARCHITECTURAL DRAWINGS FOR DETAILS AT ALL WINDOW AND DOOR JAMBS.
8. SEE ARCHITECTURAL DRAWINGS FOR STUD SIZE, SPACING, AND CALLOUTS AT NON-STRUCTURAL WALLS.
9. FOR TYPICAL CONNECTION OF NON-LOAD BEARING WALLS TO SLAB, USE POWDER ACTUATED FASTENERS AT 16" OC.
11. ALL LOAD BEARING WALL STUDS SHALL BE COVERED WITH A MIN OF 1/2" SHEATHING (EITHER GWB, WOOD SHEATHING OR STEEL SHEET AS APPLICABLE) BOTH SIDE OF STUDS. SEE SHEARWALL SCHEDULE FOR SHEATHING. ATTACHMENT AT SHEARWALLS. AT WALLS WITH SHEATHING ON ONE SIDE OF WALL ONLY PROVIDE BRIDGING PER TYPICAL STEEL STUD DETAILS.
12. ALL STUDS SHALL BE CONTINUOUS BETWEEN DETAIL CUTS

ROOF FRAMING NOTES

1. ALL BEAMS SHALL HAVE NO CAMBER UNLESS INDICATED BY C = X" ON PLAN. WHERE X" IS THE REQUIRED CAMBER IN INCHES.
2. VERIFY ALL TOP OF BEAM AND TOP OF WALL ELEVATIONS WITH ARCHITECTURAL DRAWINGS.
3. VERIFY ALL DOOR AND WINDOW WIDTHS AND HEIGHTS WITH ARCHITECTURAL DRAWINGS.
4. VERIFY SIZE AND LOCATION OF ALL MECHANICAL PENETRATIONS WITH ARCHITECTURAL AND MECHANICAL DRAWINGS.
5. STEEL JOIST DESIGNATION IS SHOWN AS TOTAL LOAD IN POUNDS PER FOOT OVER THE LIVE LOAD IN POUNDS PER FOOT.
7. AT EACH WIDE FLANGE BEAM SUPPORTING STEEL JOISTS, STEEL JOIST MANUFACTURER SHALL MATCH THE BEARING DEPTHS OF ALL STEEL JOISTS FRAMING INTO WIDE FLANGE BEAM.
8. STEEL JOISTS MAY HAVE NON-STANDARD BEARING HEIGHTS. STEEL DETAILER TO COORDINATE HEIGHT OF BEARING SEAT WITH JOIST MANUFACTURER.
9. ALL JOIST SPACINGS SHALL BE 8'-0" MAX UNLESS NOTED OTHERWISE.
10. STEEL JOIST SUPPLIER SHALL PROVIDE BRIDGING FOR JOISTS PER STEEL JOIST INSTITUTE AND MANUFACTURERS RECOMMENDATIONS. JOIST MANUFACTURER SHALL ALSO COORDINATE BRIDGING LOCATIONS SO AS TO AVOID OBSTRUCTING OR CONFLICTING W/ MECHANICAL DUCTWORK, WINDOWS, SKYLIGHTS, ETC. IN ADDITION TO LOADS SHOWN, BOTH ROOF JOISTS AND BRIDGING SHALL ALSO BE DESIGNED FOR A NET UPLIFT OF 10.0 PSF.
11. STEEL JOIST MANUFACTURER SHALL DESIGN JOISTS FOR LOADS DUE TO SPRINKLER SYSTEM, CONTRACTOR TO COORDINATE AND PROVIDE JOIST MANUFACTURER WITH MAGNITUDE AND LOCATION OF LOADS.
12. STEEL JOIST MANUFACTURER SHALL DESIGN JOIST FOR ANY ADDITIONAL SPECIAL LOADS AS INDICATED ON THE STRUCTURAL DRAWINGS. THESE LOADS SHALL INCLUDE SNOW DRIFTING, MECHANICAL EQUIPMENT, AXIAL SEISMIC FORCES, CHORD FORCES, ETC.
13. STEEL JOIST MANUFACTURER SHALL LOCATE, SIZE AND PROVIDE ERECTION BOLTS AS REQUIRED. STEEL DETAILER SHALL COORDINATE LOCATION OF BOLT HOLES IN ALL CAP PLATES, EMBEDS, ETC.
14. FOR OPENINGS IN STEEL ROOF DECK NOT SHOWN SEE DETAIL 7 / SB020.
15. ATTACH NON-STRUCTURAL WALLS TO ROOF PER DETAIL 8 / SB021.
16. ATTACH ROOF DIAPHRAGM TO SUPPORTS PER DIAPHRAGM ATTACHMENT PLAN.
17. ASTERISK (*) INDICATES BEAMS WHICH ARE LOCATED WITH TOP OF STEEL ELEVATIONS 4" BELOW ROOF DECK TO SUPPORT TYPICAL ROOFJOISTS.

LEGEND:

- KEYNOTE - REFER TO KEYNOTES ON SHEET WHICH IT IS NOTED.
- STEP FOOTING LOCATION - SEE DETAIL 6 / SB020.
- WALL BELOW FLOOR OR ROOF FRAMING PLAN ON WHICH IT IS NOTED - SEE PLAN BELOW FOR REQUIREMENTS.
- STEEL STUD STRUCTURAL WALL ORIGINATING ON FOUNDATION OR FLOOR FRAMING PLAN ON WHICH IT IS NOTED.
- STEEL BRACED FRAME. SEE SHEET SB501 FOR BRACED FRAME ELEVATIONS.
- STEEL BRACED FRAME BELOW FLOOR OR ROOF FRAMING PLAN ON WHICH IT IS NOTED.
- STEP IN SLAB.

KEY TO ABBREVIATIONS

AB	ANCHOR BOLT	L	ANGLE
ABV	ABOVE	LLH	LONG LEG HORIZONTAL
ADDL	ADDITIONAL	LLV	LONG LEG VERTICAL
ADJ	ADJACENT	LOC	LOCATION
AFF	ABOVE FINISH FLOOR	LONGIT	LONGITUDINAL
ALT	ALTERNATE	MAX	MAXIMUM
ARCH	ARCHITECTURAL, ARCHITECT	MB	MACHINE BOLT
ASD	ALLOWABLE STRESS DESIGN	MECH	MECHANICAL
BEL	BELOW	MFR	MANUFACTURER
BLKG	BLOCKING	MIN	MINIMUM
BM	BEAM	MIW	MALLEABLE IRON WASHER
BNDY	BOUNDARY	NS	NEAR SIDE
BOT	BOTTOM	NTS	NOT TO SCALE
BRG	BEARING	NWT	NORMAL WEIGHT
BS	BOTH SIDES	OI	OVER
BTWN	BETWEEN	OC	ON CENTER
BU	BUILT UP	O.F.	OUTSIDE FACE
CIP	CAST IN PLACE	OPP	OPPOSITE HAND
CJ	CONSTRUCTION/CONTROL JOINT	OPNG	OPENING
CL	CENTERLINE	OSB	ORIENTED STRAND BOARD
CLG	CEILING	PC	PRE-CAST
CLR	CLEAR	PDF	POWER DRIVEN FASTENERS, PAF
CMU	CONCRETE MASONRY UNIT	PAF	POWER ACTUATED FASTENERS, PDF
COL	COLUMN	PERP	PERPENDICULAR
CONC	CONCRETE	PL	PLATE
CONN	CONNECT, CONNECTION	PLF	POUNDS PER LINEAR FOOT
CONT	CONTINUOUS	PNL	PANEL
COORD	COORDINATE	PRE-ENGR	PRE-ENGINEERED
CSK	COUNTERSINK	PROV	PROVIDE
CTR	CENTER	PT	POST TENSIONED
CVR	COVER	PW	PLYWOOD
DEG	DEGREE	REF	REFERENCE
DIA	DIAMETER	REINF	REINFORCE, REINFORCEMENT
DBL	DOUBLE	REQ'D	REQUIRED
EA.	EACH	RF	ROOF
EF	EACH FACE	SCHED	SCHEDULE
ELEV	ELEVATION, ELEVATOR	SFRS	SEISMIC FORCE RESISTING SYSTEM
EMB	EMBEDMENT	SHTG	SHEATHING
ENGR	ENGINEER	SIM	SIMILAR
EQ	EQUAL/EQUIVALENT	SIMP	SIMPSON STRONG-TIE
EQUIV	EQUIVALENT	SOG	SLAB ON GRADE
ES	EACH SIDE	SPCG	SPACING
EW	EACH WAY	SQ	SQUARE
(E)	EXISTING	STD	STANDARD
EXP	EXPANSION	STFF	STIFFENER
EXT	EXTERIOR	SW	SHEARWALL
FDN	FOUNDATION	T&G	TONGUE AND GROOVE
FF	FINISH FLOOR	THK	THICK
FFE	FINISH FLOOR ELEVATION	THRD	THREADED
FOC	FACE OF CONCRETE	T.O.	TOP OF
FOM	FACE OF MASONRY	TOC	TOP OF CONCRETE
FOS	FACE OF STUD	TOF	TOP OF FOOTING
FS	FAR SIDE	TOPL	TOP OF PLATE
FTG	FOOTING	TOS	TOP OF STEEL
GA	GAGE	T.O.W.	TOP OF WALL
GALV	GALVANIZED	TRANSV	TRANSVERSE
GC	GENERAL CONTRACTOR	TRTD	TREATED
GL	GLUE LAMINATED	TYP	TYPICAL
GWB	GYPSUM WALL BOARD	UNO	UNLESS NOTED OTHERWISE
HGR	HANGER	VFY	VERIFY
HORIZ	HORIZONTAL	VERT	VERTICAL
HSS	HOLLOW STEEL SECTION	W/	WITH
HT	HEIGHT	W/O	WITHOUT
I.F.	INSIDE FACE	WF	WIDE FLANGE
INT	INTERIOR	WHS	WELDED HEADED STUD
JNT	JOINT	WP	WORK POINT
JST	JOIST	WTS	WELDED THREADED STUD
K, KIPS	KIPS=1000 LBS	WWF	WELDED WIRE FABRIC

FOOTING SCHEDULE

MARK	SIZE	REINFORCING	REMARKS
F4.0	4'-0" x 4'-0" x 1'-0"	(4) #5 EACH WAY AT BOTTOM OF FOOTING	
F5.0	5'-0" x 5'-0" x 1'-0"	(4) #5 EACH WAY AT BOTTOM OF FOOTING	
F6.0	6'-0" x 6'-0" x 1'-0"	(5) #5 EACH WAY AT BOTTOM OF FOOTING	

FOOTING SCHEDULE NOTES

1. TOP OF FOOTING ELEVATION = -1'-0" UNLESS NOTED OTHERWISE ON PLAN.
2. FOOTING DESIGN BASED ON 2500 PSF ALLOABLE SOIL BEARING PRESSURE.
3. EQUALLY SPACE REINFORCING IN EACH DIRECTION.
4. PROVIDE 3" CLEAR TO REINFORCING AT BOTTOM OF FOOTING.

EXTERIOR NON-BEARING COLD-FORMED STEEL STUD WALL SCHEDULE

MARK	STUD DESIGNATION	SPACING	MAXIMUM ALLOWABLE STUD HEIGHT	NOTES
818	8" x 18 GA (800S162-43)	16" OC	24'-4"	TYP EXTERIOR WALL
816	8" x 16 GA (800S162-54)	16" OC	29'-11"	
812	8" x 12 GA (800S162-97)	16" OC	35'-8"	

NOTES:

1. STUD SPANS BASED ON 15 PSF (ASD) HORIZONTAL WIND LOAD WITH L/240 DEFLECTION LIMIT
2. PROVIDE BRIDGING PER TYPICAL BRIDGING DETAIL AT WALLS NOT SHEATHED FULL HEIGHT EACH SIDE.

INTERIOR NON-BEARING COLD-FORMED STEEL STUD WALL SCHEDULE

STUD SIZE	SPACING	MAX ALLOWABLE STUD HEIGHT
362S125-33	24" OC	14'-0"
	16" OC	16'-1"
362S125-54	24" OC	16'-4"
	16" OC	18'-8"
600S125-33	24" OC	20'-5"
	16" OC	23'-11"
600S125-54	24" OC	24'-4"
	16" OC	28'-0"

NOTES:

1. ALLOWABLE STUD HEIGHTS BASED ON 5 PSF MINIMUM HORIZONTAL LIVE LOAD WITH L/240 DEFLECTION LIMIT.
2. PROVIDE BRIDGING AT 48" OC VERT MAX AT ALL STUD WALLS. SEE TYPICAL BRIDGING DETAILS.
4. SEE ARCH DRAWINGS (PLANS AND WALL TYPES) FOR STUD WALL SIZES.

GRADE BEAM SCHEDULE

MARK	WIDTH	DEPTH	LONGITUDINAL REINFORCING	STIRRUPS	REMARKS
GB1	4' - 0"	2' - 0"	(6) #6 CONT TOP AND BOT	(4) #4 AT 8" OC	
GB2	5' - 0"	2' - 6"	(6) #7 CONT TOP AND BOT	(4) #4 AT 8" OC	
GB3	6' - 0"	3' - 0"	(7) #8 CONT TOP AND BOT	(4) #4 AT 8" OC	

EXTERIOR JAMB STUD SCHEDULE

MAX OPENING WIDTH (ft)	STUD SIZE		
	800 S 162-43	800 S 162-54	800 S 162-97
	NUMBER OF STUDS REQUIRED		
4	2	1	1
8	3	1	1
12	3	2	1

NOTES:

1. SEE TYPICAL JAMB STUD CONFIGURATION FOR CALLOUTS

BUILT-UP STEEL HEADER SCHEDULE

INTERIOR OPENINGS	
SPAN	FRAMING
4'-0" TO 10'-0"	(2) 600 S 162-54 (UNPUNCHED)
10'-0" TO 16'-0"	(2) 800 S 162-54 (UNPUNCHED)
EXTERIOR OPENINGS	
SPAN	FRAMING
0'-0" TO 6'-0"	(2) 600 S 162-54 (UNPUNCHED)
6'-0" TO 12'-0"	(2) 800 S 162-54 (UNPUNCHED)

INTERIOR JAMB STUD SCHEDULE

MAX OPENING WIDTH (ft)	STUD SIZE		
	362 S 162-33	600 S 162-33	800 S 162-43
	NUMBER OF STUDS REQUIRED		
4	1	1	1
8	2	2	2
12	3	2	2

CFS CEILING JOIST SCHEDULE

JOIST SIZE	SPACING	MAX ALLOW JOIST SPAN	BRACING LOCATION
362S125-27	24" OC	7'-10"	NOT REQ'D
	16" OC	8'-10"	NOT REQ'D
362S125-33	24" OC	10'-11"	NOT REQ'D
	16" OC	12'-2"	NOT REQ'D
600S125-27	24" OC	13'-2" (*)	MIDSPAN
	16" OC	14'-9" (*)	MIDSPAN
600S125-33	24" OC	14'-2"	MIDSPAN
	16" OC	15'-10"	MIDSPAN

NOTES:

1. JOIST SPANS BASED ON CEILING SUPPORTING (2) LAYERS OF 5/8" GWB MAX WITH L/240 DEFLECTION LIMIT.
2. PROVIDE JOIST BRACING WHERE REQUIRED PER TYPICAL CEILING JOIST BRACING DETAIL.
3. ASTERISK (*) INDICATES WEB STIFFENERS REQUIRED AT BEARING LOCATIONS.

UNOFFICIAL COPY Official bid documents, plan holder's list, and addenda (if applicable) are available on BXWA.com

Helix design group

AMERICAN INSTITUTE OF ARCHITECTS

HELIX DESIGN GROUP, INC

AHBL
TACOMA - SEATTLE - SPOKANE - TRI-CITIES
253.383.2422 TEL 253.383.2572 FAX www.ahbl.com WEB
2215 North 30th Street, Suite 300 Tacoma, WA 98403

FRAMING NOTES AND SCHEDULES

CITY OF FEDERAL WAY
FLEET & SHOP BUILDING

FEDERAL WAY, WASHINGTON

REVISION	DATE

DATE	JOB NO.
05.06.24	a23-087

BID SET

SB030

DRAWING NO.

© HELIX DESIGN GROUP, INC.: All rights reserved. No part of this document may be reproduced in any form or by any means without permission in writing from Helix Design Group.

PLOTTED: 5/10/2024 5:35:45 PM PROJECT: a23-087 - CITY OF FEDERAL WAY
FILE PATH: C:\Users\kgysler\Documents\220057-2-STRUCT-R22-Bldg B_kgysler.rvt

GENERAL PLAN NOTES

1. SEE SHEETS SB001 AND SB002 FOR STRUCTURAL NOTES.
2. SEE SHEETS SB010 AND SB011 FOR QUALITY ASSURANCE PLAN.
3. SEE SHEET SB020 FOR TYPICAL DETAILS.
4. SEE SHEET SB021 FOR STEEL STUD DETAILS.

FOUNDATION KEYNOTES

1. 6" REINFORCED CONCRETE SLAB ON GRADE OVER 10 MIL VAPOR BARRIER OVER 6" CAPILLARY BREAK. REINFORCE SLAB WITH #4 AT 18" OC EACH WAY AT CL OF SLAB. SEE GEOTECHNICAL ENGINEERING REPORT FOR SUBBASE AND CAPILLARY BREAK REQUIREMENTS.
2. HOUSEKEEPING PAD MECH / ELECT - SEE 3 / SB301

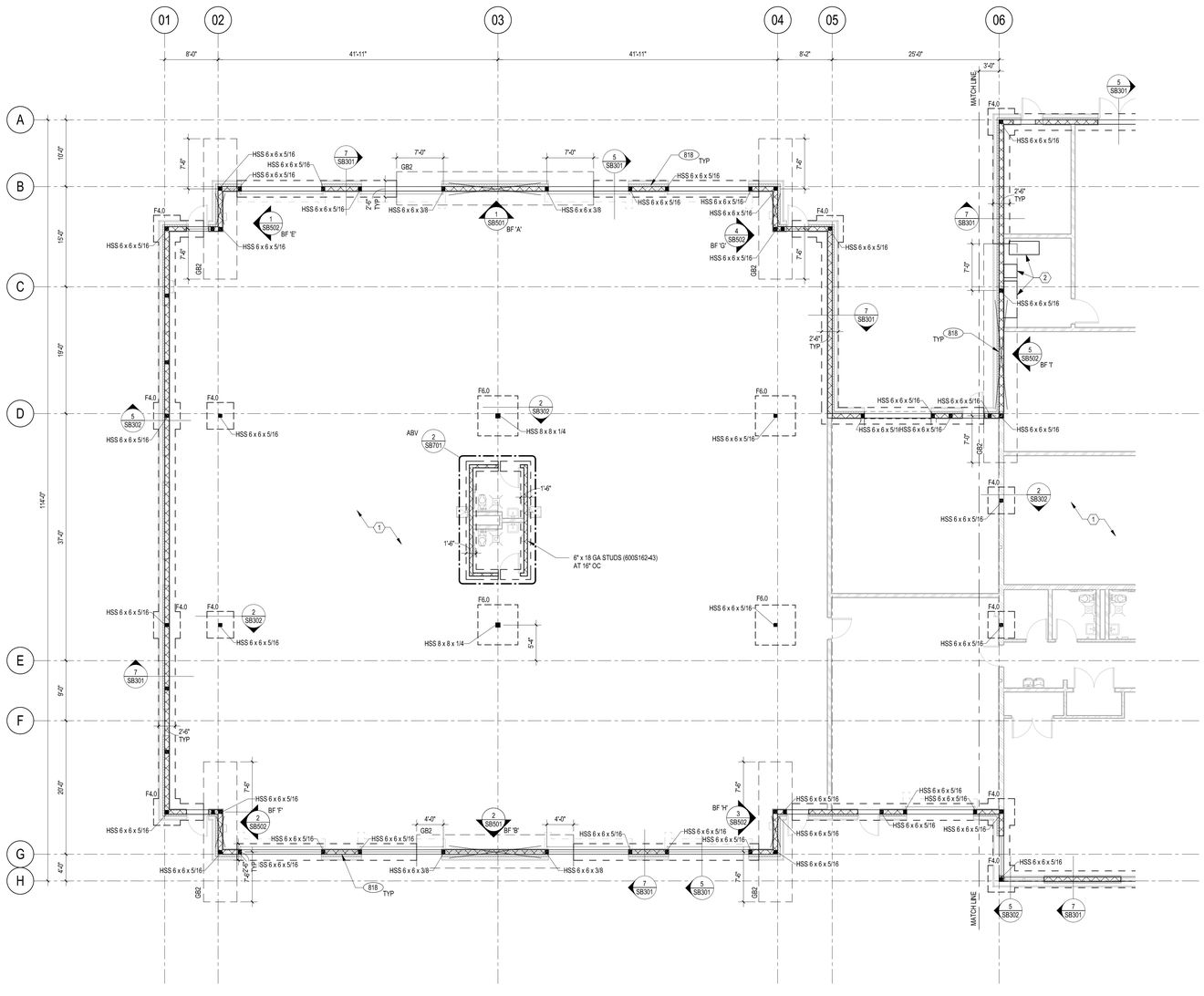

1 FOUNDATION PLAN - SOUTH

1/8" = 1'-0"

0 4' 8' 16'
SCALE IN FEET

Helix design group

AMERICAN INSTITUTE OF ARCHITECTS

HELIX DESIGN GROUP, INC

AHBL
TACOMA - SEATTLE - SPOKANE - TRI-CITIES
253.383.2422 TEL 253.383.2572 FAX www.ahbl.com WEB
2215 North 30th Street, Suite 300 Tacoma, WA 98403

FOUNDATION PLAN - SOUTH

CITY OF FEDERAL WAY
FLEET & SHOP BUILDING

FEDERAL WAY, WASHINGTON

REVISION	DATE

DATE	JOB NO.
05.06.24	a23-087

BID SET

SB101

DRAWING NO.

© HELIX DESIGN GROUP, INC.: All rights reserved. No part of this document may be reproduced in any form or by any means without permission in writing from Helix Design Group.

PLOTTED: 5/10/2024 5:35:48 PM
FILE PATH: C:\Users\keystler\Documents\22005\22-STRUCT-R22-Bldg B_keystler.rvt
PROJECT: a23-087 - CITY OF FEDERAL WAY

UNOFFICIAL COPY Official bid documents, plan holder's list, and addenda (if applicable) are available on BXWA.com

GENERAL PLAN NOTES

1. SEE SHEETS SB001 AND SB002 FOR STRUCTURAL NOTES.
2. SEE SHEETS SB010 AND SB011 FOR QUALITY ASSURANCE PLAN.
3. SEE SHEET SB020 FOR TYPICAL DETAILS.
4. SEE SHEET SB021 FOR STEEL STUD DETAILS.

FOUNDATION KEYNOTES

1. 6" REINFORCED CONCRETE SLAB ON GRADE OVER 10 MIL VAPOR BARRIER OVER 6" CAPILLARY BREAK. REINFORCE SLAB WITH #4 AT 18" OC EACH WAY AT CL OF SLAB. SEE GEOTECHNICAL ENGINEERING REPORT FOR SUBBASE AND CAPILLARY BREAK REQUIREMENTS.
2. TRENCH DRAIN PER 10 / SB301.
3. HOUSEKEEPING PAD MECH / ELECT - SEE 3 / SB301

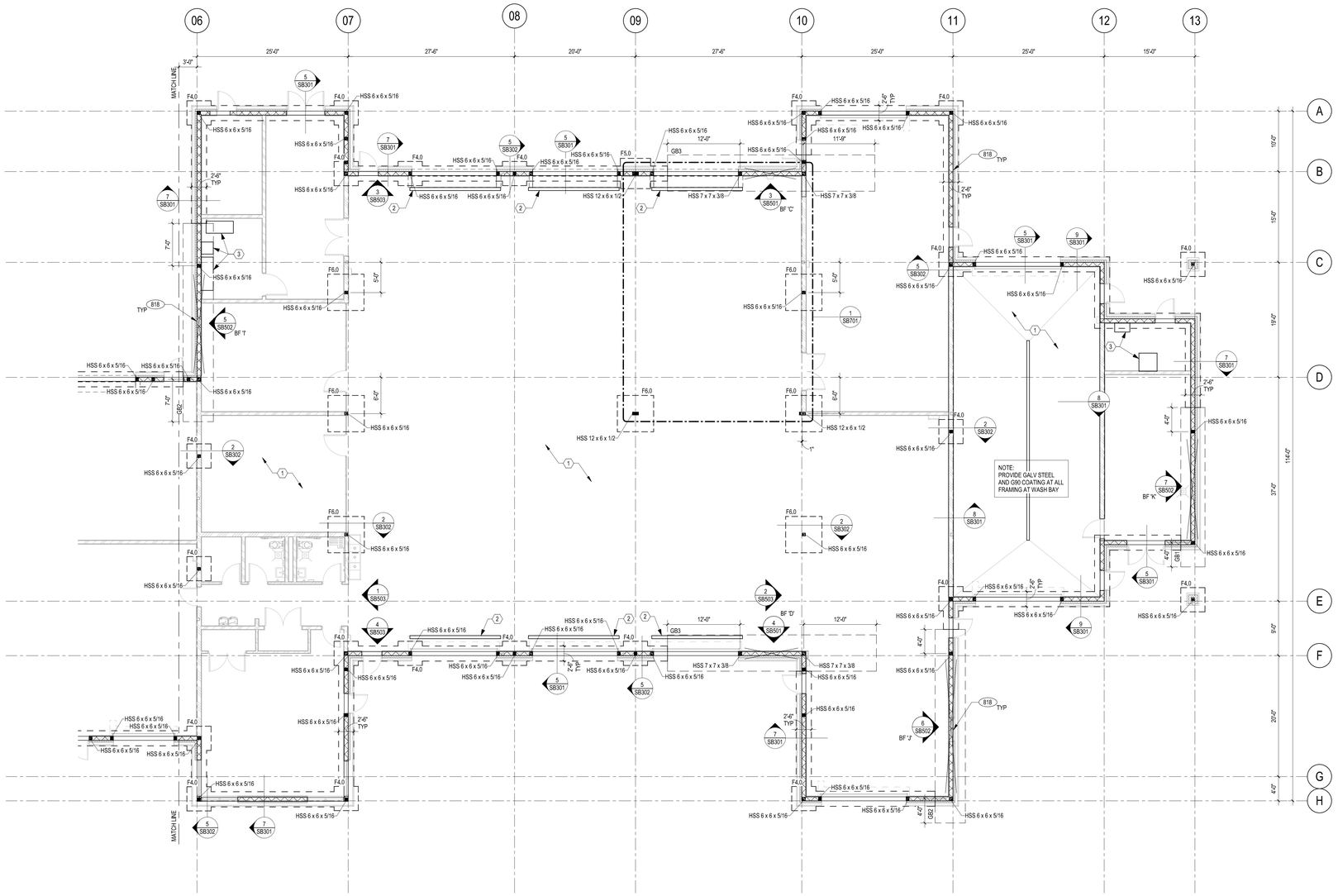

1 FOUNDATION PLAN - NORTH

1/8" = 1'-0"

0 4' 8' 16'
SCALE IN FEET

Helix design group

AMERICAN INSTITUTE OF ARCHITECTS

HELIX DESIGN GROUP, INC

AHBL
TACOMA - SEATTLE - SPOKANE - TRI-CITIES
253.383.2422 TEL 253.383.2572 FAX www.ahbl.com WEB
2215 North 30th Street, Suite 300 Tacoma, WA 98403

FOUNDATION PLAN - NORTH

CITY OF FEDERAL WAY
FLEET & SHOP BUILDING

FEDERAL WAY, WASHINGTON

REVISION	DATE

DATE	JOB NO.
05.06.24	o23-087

BID SET

SB102

DRAWING NO.

© HELIX DESIGN GROUP, INC.: All rights reserved.
No part of this document may be reproduced in any form or by any means without permission in writing from Helix Design Group.

PLOTTED: 5/10/2024 5:35:53 PM PROJECT: o23-087 - CITY OF FEDERAL WAY
FILE PATH: C:\Users\kgysler\Documents\22\00573-STRUCT-R22-Bldg B_kgysler2FSQ3.rvt

UNOFFICIAL COPY Official bid documents, plan holder's list, and addenda (if applicable) are available on BXWA.com

GENERAL PLAN NOTES

1. SEE SHEETS SB001 AND SB002 FOR STRUCTURAL NOTES.
2. SEE SHEETS SB010 AND SB011 FOR QUALITY ASSURANCE PLAN.
3. SEE SHEET SB020 FOR TYPICAL DETAILS.
4. SEE SHEET SB021 FOR STEEL STUD DETAILS.

ROOF KEYNOTES

1. HATCHED REGION INDICATES EXTENTS OF FUTURE PV PANELS AND INCLUDES 4 PSF COLLATERAL DEAD LOAD
2. METAL DECK PER DIAPHRAGM SCHED

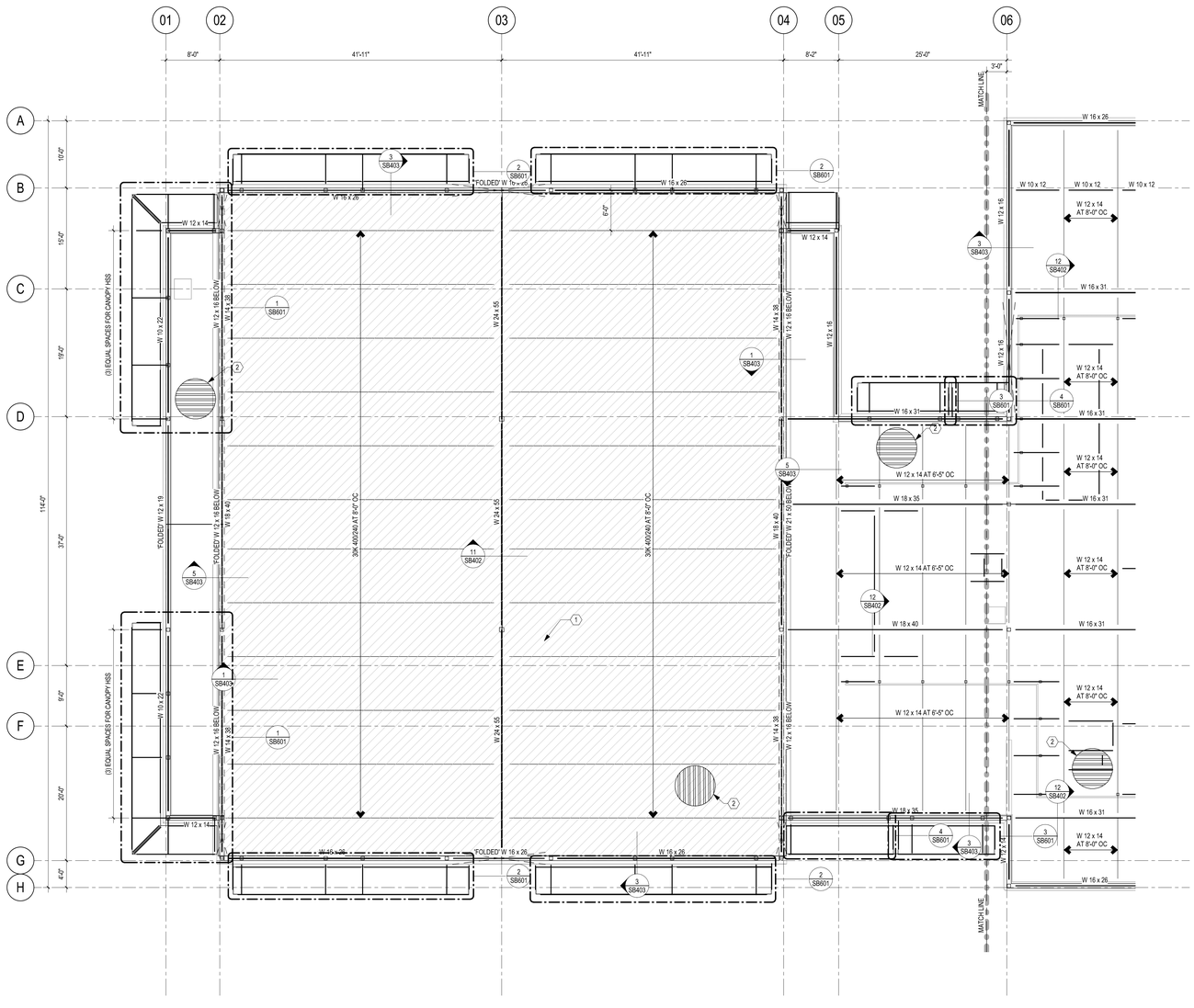

1 ROOF FRAMING PLAN - SOUTH

1/8" = 1'-0"

0 4' 8' 16'
SCALE IN FEET

Helix design group

AMERICAN INSTITUTE OF ARCHITECTS

HELIX DESIGN GROUP, INC

AHBL
TACOMA - SEATTLE - SPOKANE - TRI-CITIES
253.383.2422 TEL 253.383.2572 FAX www.ahbl.com WEB
2215 North 30th Street, Suite 300 Tacoma, WA 98403

ROOF FRAMING PLAN - SOUTH

CITY OF FEDERAL WAY
FLEET & SHOP BUILDING

FEDERAL WAY, WASHINGTON

REVISION	DATE

DATE	JOB NO.
05.06.24	o23-087

BID SET

SB201

DRAWING NO.

© HELIX DESIGN GROUP, INC.: All rights reserved.
No part of this document may be reproduced in any form or by any means without permission in writing from Helix Design Group.

PLOTTED: 5/10/2024 5:35:54 PM PROJECT: o23-087 - CITY OF FEDERAL WAY
FILE PATH: C:\Users\kgysler\Documents\22\0573-STRUCT-R22-Bldg B_kgysler2RSQ3.rvt

UNOFFICIAL COPY Official bid documents, plan holder's list, and addenda (if applicable) are available on BXWA.com

GENERAL PLAN NOTES

1. SEE SHEETS SB001 AND SB002 FOR STRUCTURAL NOTES.
2. SEE SHEETS SB010 AND SB011 FOR QUALITY ASSURANCE PLAN.
3. SEE SHEET SB020 FOR TYPICAL DETAILS.
4. SEE SHEET SB021 FOR STEEL STUD DETAILS.

ROOF KEYNOTES

1. METAL DECK PER DIAPHRAGM SCHED
2. HATCHED REGION INDICATES EXTENTS OF FUTURE PV PANELS AND INCLUDES 4 PSF COLLATERAL DEAD LOAD

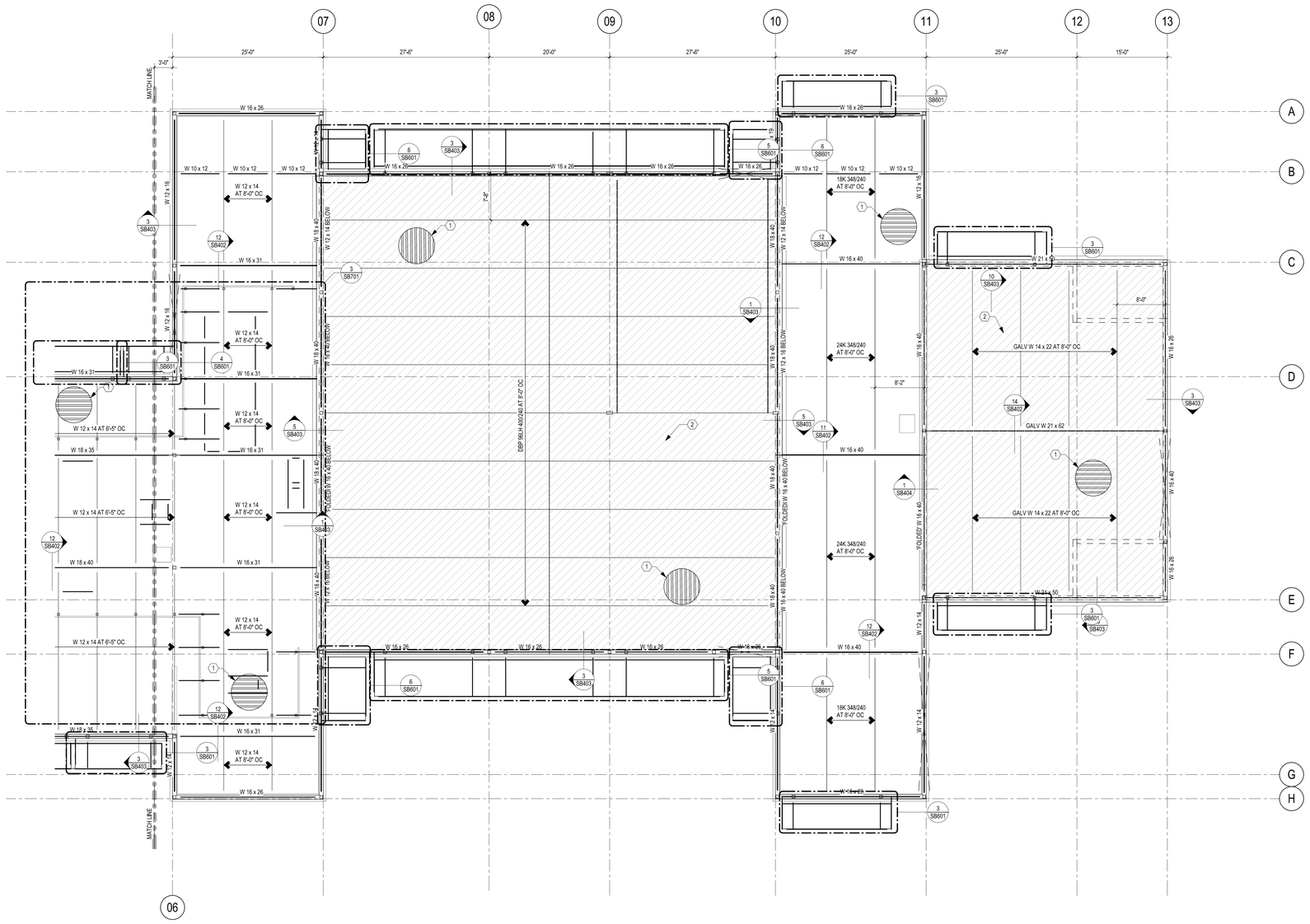

1 ROOF FRAMING PLAN - NORTH

1/8" = 1'-0"

0 4' 8' 16'
SCALE IN FEET

Helix design group

AMERICAN INSTITUTE OF ARCHITECTS

HELIX DESIGN GROUP, INC

AHBL
TACOMA - SEATTLE - SPOKANE - TRI-CITIES
253.383.2422 TEL 253.383.2572 FAX www.ahbl.com web
2215 North 30th Street, Suite 300 Tacoma, WA 98403

ROOF FRAMING PLAN - NORTH

CITY OF FEDERAL WAY
FLEET & SHOP BUILDING

FEDERAL WAY, WASHINGTON

REVISION	DATE

DATE	JOB NO.
05.06.24	a23-087

BID SET

SB202

DRAWING NO.

© HELIX DESIGN GROUP, INC.: All rights reserved. No part of this document may be reproduced in any form or by any means without permission in writing from Helix Design Group.

PLOTTED: 5/10/2024 5:35:57 PM
FILE PATH: C:\Users\kgylater\Documents\220057-STRUCTH-R22-Bldg_B_kgylaterPSG3.rvt
PROJECT: a23-087 - CITY OF FEDERAL WAY

UNOFFICIAL COPY Official bid documents, plan holder's list, and addenda (if applicable) are available on BXWA.com

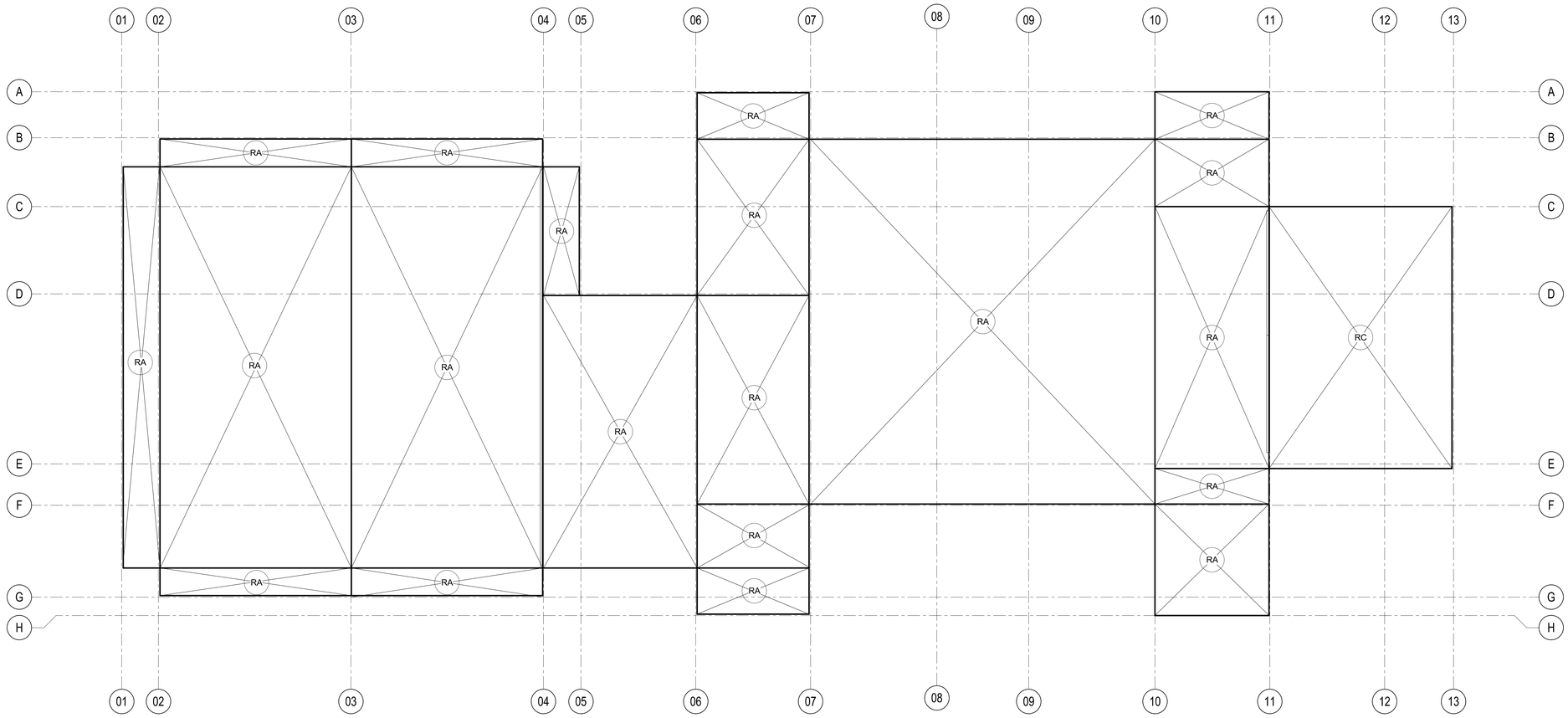

1 ROOF DIAPHRAGM ATTACHMENT PLAN

3/32" = 1'-0"

0 8 16 24

SCALE: 3/32" = 1'-0"

DIAPHRAGM SCHEDULE

MARK	DECK TYPE	DECK GAGE (THICKNESS)	DECK LAYUP	TOPPING SLAB THICKNESS	TOPPING SLAB REINF	CONNECTIONS TO SUPPORTS			AVAILABLE DIAPHRAGM SHEAR CAPACITY	NOTES
						SUPPORTS PERPENDICULAR TO FLUTES	SUPPORTS PARALLEL TO FLUTES	SUPPORTS PERPENDICULAR TO FLUTES		
RA	B-36 ROOF DECK	22 GAGE	(2) SPAN MINIMUM	N/A	N/A	1/2" DIA PUDDLE WELDS AT 12" OC - (4) PER 36" WIDE SHEET	1/2" DIA PUDDLE WELDS AT 12" OC	'DELTA GRIP' ATTACHMENT AT 12" OC	1233 PLF (LRFD)	PROTECT DECKING AT LOCATIONS EXPOSED TO VIEW
RB	B-36 ROOF DECK	22 GAGE	(2) SPAN MINIMUM	N/A	N/A	1/2" DIA PUDDLE WELDS AT 12" OC - (4) PER 36" WIDE SHEET	1/2" DIA PUDDLE WELDS AT 12" OC	'DELTA GRIP' ATTACHMENT AT 12" OC	1990 PLF (LRFD)	PROTECT DECKING AT LOCATIONS EXPOSED TO VIEW
RC	B-36 ROOF DECK	20 GAGE	(2) SPAN MINIMUM	N/A	N/A	HILTI X-HSN-24 AT 12" OC - (4) PER 36" WIDE SHEET	HILTI X-HSN-24 AT 12" OC	'DELTA GRIP' ATTACHMENT AT 12" OC	1247 PLF (LRFD)	PROTECT DECKING AT LOCATIONS EXPOSED TO VIEW PROVIDE G90 COATING MIN

DIAPHRAGM ATTACHMENT SCHEDULE NOTES:

1. DECK ATTACHMENT SHOWN IS FOR ASC STEEL DECK PER IAPMO UES ER#161, ATTACHMENT SHOWN MUST BE VERIFIED BY STRUCTURAL ENGINEER IF ALTERNATE DECK IS SELECTED BY GENERAL CONTRACTOR.
2. THE LENGTH OF SEAM WELDS SHALL BE A MINIMUM OF 1 1/2" LONG.
3. ARC SPOT OR ARC SEAM (PUDDLE) WELDS SHALL HAVE AN EFFECTIVE FUSION AREA TO SUPPORTING MEMBERS, EQUIVALENT TO AT LEAST 3/8" BY 1" LONG OR 1/2" DIAMETER.
4. WHERE INDIVIDUAL PANELS ARE CUT, THE PARTIAL PANEL SHALL BE FASTENED IN A MANNER TO FULLY TRANSFER THE SHEAR AT THE POINT OF THE DIAPHRAGM TO ADJACENT FULL PANELS.
5. SUSPENDED CEILING, LIGHT FIXTURES, DUCTS, OR OTHER UTILITIES SHALL NOT BE SUPPORTED BY STEEL ROOF DECK WITHOUT FIRST CONTACTING THE STRUCTURAL ENGINEER.
6. MINIMUM ROOF DECK MANUFACTURING TOLERANCES:

PANEL LENGTH:	+/- 1/2"
THICKNESS:	NOT LESS THAN 95% OF THE DESIGN BASE METAL THICKNESS
PANEL COVER WIDTH:	-3/8" +3/4"
PANEL CAMBER / SWEEP:	1/4" IN 10'-0" LENGTH
PANEL END OUT OF SQUARE:	1/8" PER FOOT OF PANEL WIDTH
PANEL HEIGHT:	+/- 1/16"

7. SEE 3/SB401 FOR WELDING REQUIREMENTS AT COLLECTORS ALONG DIAPHRAGM BOUNDARIES.
8. END LAP ALL DECK PANEL ENDS.

UNOFFICIAL COPY Official bid documents, plan holder's list, and addenda (if applicable) are available on BXWA.com

PLOTTED: 5/10/2024 5:35:58 PM PROJECT: o23-087 - CITY OF FEDERAL WAY
FILE PATH: C:\Users\kgysler\Documents\22\0573-STRUCT-R22-Bldg_B_kgysler.rvt

Helix design group

AMERICAN INSTITUTE OF ARCHITECTS

HELIX DESIGN GROUP, INC

AHBL
TACOMA - SEATTLE - SPOKANE - TRI-CITIES
253.383.2422 TEL 253.383.2572 FAX www.ahbl.com WEB
2215 North 30th Street, Suite 300 Tacoma, WA 98403

ROOF DIAPHRAGM ATTACHMENT PLAN

CITY OF FEDERAL WAY
FLEET & SHOP BUILDING

FEDERAL WAY, WASHINGTON

REVISION	DATE

DATE	JOB NO.
05.06.24	o23-087

BID SET

DRAWING NO.
SB203

© HELIX DESIGN GROUP, INC.: All rights reserved. No part of this document may be reproduced in any form or by any means without permission in writing from Helix Design Group.